ALLOWABLE UPLIFT AND LATERAL LOADS FOR TRUSS SCREW IN TOP PLATE TO TRUSS/RAFTER/JOIST CONNECTIONS[1,2,3]

Fastener Designation	Min. Penetration into Truss/ Rafter/Joist (in.)	Top Plate	Fastener Angle to Vertical	Allowable Loads (lb)		
				SP (SG = 0.55)		
				Uplift	F1	F2
SWT6	2-1/2	Double	0°	940	530	500
			22.5°	940	360	705

NOTES:
1. Wood truss, rafter, or floor joist members shall be a minimum of 2" nominal thickness.
2. Includes 1.6 duration of load increase for wind and seismic. No further duration of load increases permitted. Reduce design values for other load durations as applicable.
3. Install fastener at an upward angle from the vertical of 20° to 25° (22.5° is optimal) or 0°. For installation between 20° and 25°, design values for 22.5° may be used.

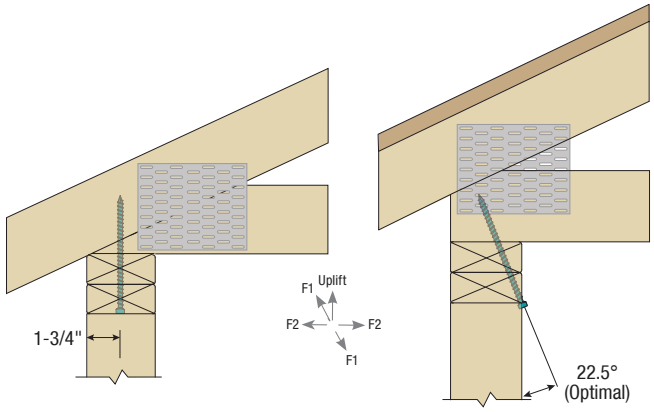

ALLOWABLE UPLIFT AND LATERAL LOADS FOR TRUSS SCREW IN TOP PLATE TO GABLE END TRUSS CONNECTIONS[1,2,3]

Fastener Designation	Min. Penetration into Gable End Truss (in.)	Top Plate	Fastener Angle to Vertical	Allowable Loads (lb)		
				SP (SG = 0.55)		
				Uplift	F1	F2
SWT6	3	Double	0°	940	650	565

NOTES:
1. Gable end truss bottom chord shall be a minimum of 2" nominal thickness. Design of truss, rafter, or floor joist is by others.
2. Includes 1.6 duration of load increase for wind and seismic. No further duration of load increases permitted. Reduce design values for other load durations as applicable.
3. Install fastener at an upward angle from the vertical of 0 degrees. Fastener edge distance is ¾".

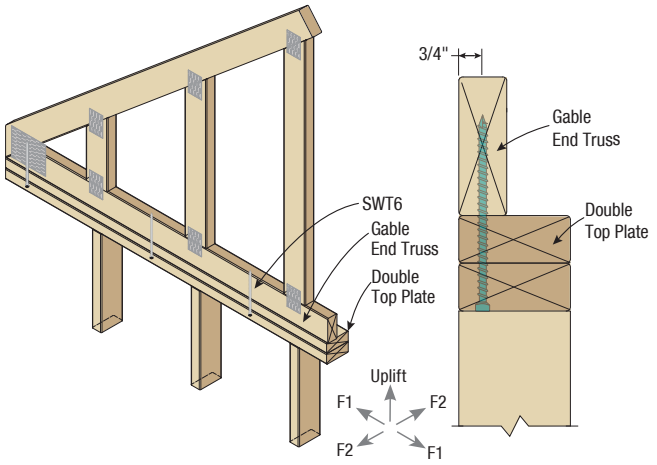

ALLOWABLE UPLIFT LOAD FOR TRUSS SCREW IN VALLEY TRUSS CONNECTION[1,2,3,4]

Fastener Designation	Min. Penetration into Main Member (in.)	Fastener Angle to Vertical	Allowable Uplift Load (lb)
			SP (SG = 0.55)
SWT6	2	0°	675

NOTES:
1. Install fastener at an angle from the vertical of 0°, with the fastener centered on the valley truss bottom chord members.
2. Truss members shall be a minimum of 2" nominal thickness. Sheathing may be installed between the truss members.
3. Lower truss member may have a maximum 6:12 pitch. A minimum 2" penetration into the main member is required.
4. Includes 1.6 duration of load increase for wind and seismic. No further duration of load increases permitted. Reduce design values for other load durations as applicable.

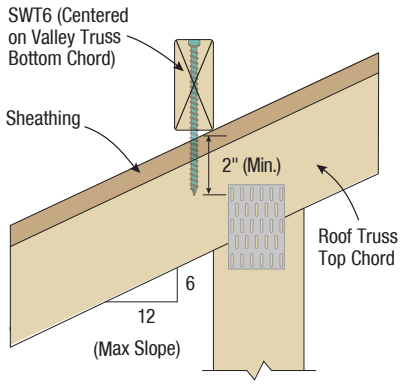

ALLOWABLE UPLIFT AND LATERAL LOADS FOR STUD TO PLATE CONNECTIONS, FASTENER INSTALLED IN NARROW & WIDE FACES

Fastener Designation[1]	Nominal Plate Thickness[2]	Allowable Loads[3,4] (lb)	
		SP (SG = 0.55)	
		Uplift	Lateral (F2)[5]
SWT45	2x	565	405

NOTES:
1. Fastener shall be installed at an angle between 20-30 degrees. 22 degrees is optimal.
2. Dimensional lumber members shall be a minimum of 2" nominal thickness.
3. Includes 1.6 duration of load increase for wind and seismic. No further duration of load increases permitted. Reduce design values for other load durations as applicable.
4. Limit one fastener installed in the narrow face of each stud.
5. The lateral load direction (F2) is perpendicular to the face of the wall.

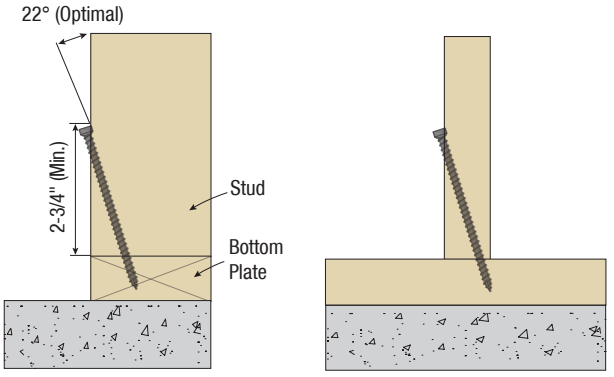

Stud-to-Bottom Plate (Narrow Face)

Stud-to-Bottom Plate (Wide Face)

 ©Copyright 2026 Quick Tie Products, Inc.