

MTS & HTS

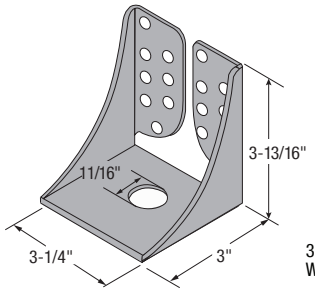

QGC for QT Cables
(Part includes structural wood screws)

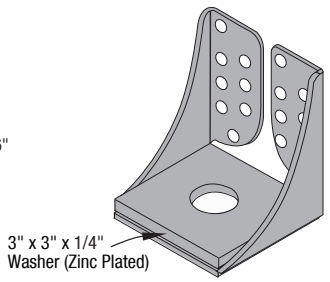

QGCW for Threaded Rods
(Part includes washer and structural wood screws)

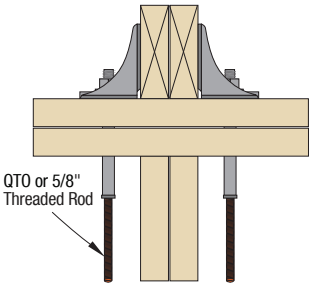

QGC (back-to-back)
for 2-ply truss/rafter

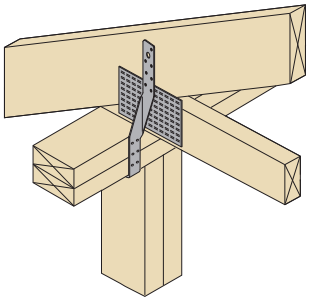

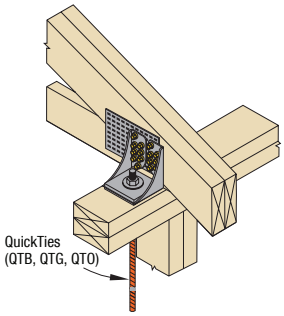

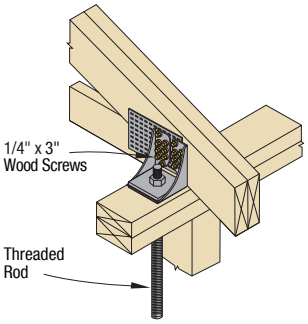

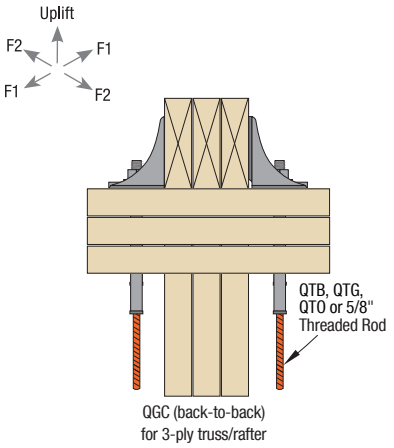

QGC (back-to-back)
for 3-ply truss/rafter

'4"

ALLOWABLE LOADS FOR HA4, HA6, HA8, HA10 & QGC[1,2] AND MTS & HTS (LB)[3,4,5]

	Products	Fasteners			Southern Pine (SG = 0.55)				Douglas Fir-Larch (SG = 0.50)				Spruce-Pine-Fir (SG = 0.42)			
		Type	Rafter/ Truss	Plates	Uplift		F1	F2	Uplift		F1	F2	Uplift		F1	F2
					1.0	1.6	1.6	1.6	1.0	1.6	1.6	1.6	1.0	1.6	1.6	1.6
HA	HA4	8d x 1-1/2 (0.131 x 1.5")	5	4	-	662	180	120	-	599	158	120	-	514	135	106
		10d x 1-1/2 (0.148 x 1.5")														
	HA6	8d x 1-1/2 (0.131 x 1.5")	5	5	535	705	145	140	495	655	125	125	425	575	80	100
	HA8	8d x 1-1/2 (0.131 x 1.5")	5	5	-	600	61	61	-	600	61	61	-	485	61	61
		10d x 1-1/2 (0.148 x 1.5")	5	5	-	815	94	94	-	705	69	69	-	540	69	69
	HA10 HA10R HA10-2	10d x 1-1/2 (0.148 x 1.5")	9	8	1,005	1,140	560	335	930	1,055	515	310	800	910	335	220
		10d Common (0.148 x 3")			1,005	1,350	560	330	930	1,245	515	280	800	1,075	335	230
MTS	MTS12-3Z MTS16-3Z MTS20-3Z MTS24-3Z	10d x 1-1/2 (0.148 x 1.5")	14[6]	7[7]	895	1,085	-	-	825	1,000	-	-	715	865	-	-
		10d Common (0.148 x 3")														
HTS	HTS16-3Z HTS20-3Z HTS24-3Z HTS28-3Z	10d x 1-1/2 (0.148 x 1.5")	22[6]	11[7]	1,445	1,665	-	-	1,340	1,540	-	-	1,160	1,330	-	-
		10d Common (0.148 x 3")														
GC	QGC	1/4" Wood Screw (included)	16	(1) QTB	1,910	1,910	-	-	1,910	1,910	-	-	1,910	1,910	-	-
				(1) QTG	3,180	3,180	-	-	3,180	3,180	-		3,180	3,180	-	-
				(1) QTO	4,350	4,455	2,040	935	4,015	4,455	1,910	885	3,465	4,390	1,570	765
	QGCW	1/4" Wood Screw (included)	16	(1) 5/8" Threaded Rod	4,350	5,445	1,235	770	4,015	5,085	1,185	705	3,465	4,455	1,090	550
	QGC/QGCW	1/4" Wood Screw (included)	32	(2) QTO or (2) 5/8" Threaded Rods	8,715	8,715	-	-	8,450	8,450	-	-	7,295	7,295	-	-

NOTES:

1. Hurricane Anchors/Clips may be installed on both sides of the framing member for twice the load. QGC/QGCW may be installed on both sides (back-to-back) of the 3-ply rafter/truss for twice the load.
2. The tabulated loads are valid for clips installed on the inside or the outside of the wall. However, to maintain a continuous load path for uplift, connections in close proximity to one another, such as truss-to-plate and plate-to-stud, clips should be installed on the same side of the wall.
3. Straps do not have to be wrapped over the truss or rafter to achieve the loads shown.
4. Straps may be installed on either side of the framing member.
5. The number of fasteners shown in the table is the minimum required to achieve the loads shown.
6. Minimum nails required per strap.
7. Minimum nails at each end of the strap.