HA4, HA6, HA8, HA10, QGC, MTS & HTS

PRODUCT FEATURES:

Hurricane Anchors/Clips (HA4, HA6, HA8 & HA10) add increased resistance to wind uplift. HA's reduces toe-nailing, utilizing correctly located nail holes for fast, easy and strong attachment of rafters and trusses to plates and studs.

The QuickTie™ Girder Connectors (QGC & QGCW) are used for girder truss connections where uplift load requirements are high.

The Medium Twist Straps (MTS) and Heavy Twist Straps (HTS) are used to resist wind uplift and manufactured in lengths of 16", 20", 24" and 28". The straps have an offset shape to allow for twisting and bending. Each strap is 1-1/4" wide with nail holes (staggered across the width) punched at 1" along its length.

MATERIAL:

HA4, HA6, HA8 & HA10 - 18 Gauge
QGC - 12 Gauge
MTS - 16 Gauge
HTS - 14 Gauge

COATING:

Galvanized (G185)

INSTALLATION:

- Use all specified fasteners in schedule to achieve the tabulated values.

CODE COMPLIANCE:

TER 0910-01; FL 3557

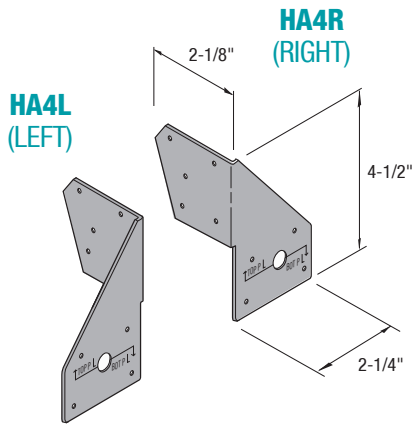

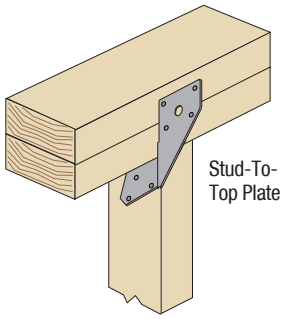

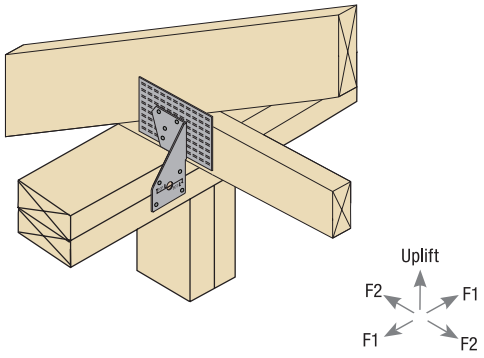

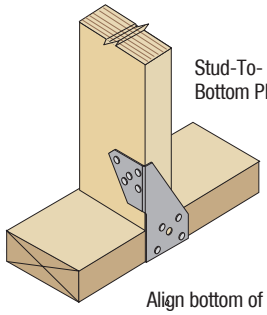

Align bottom of connector to bottom of wood plate.

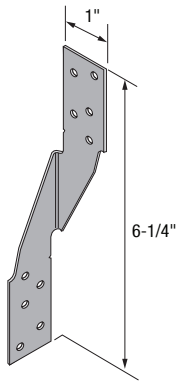

HA6

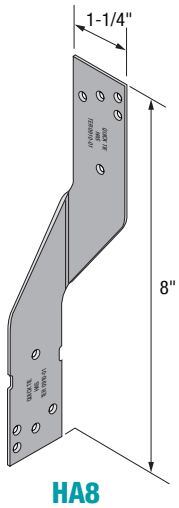

HA8

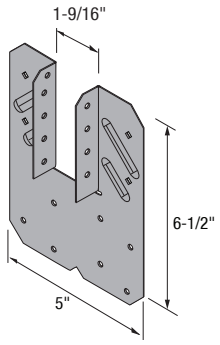

HA10

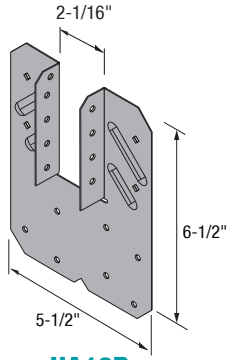

HA10R

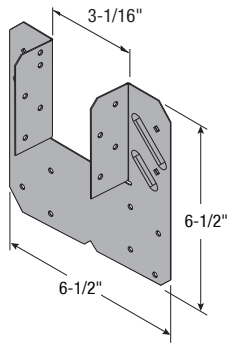

HA10-2

