CORNER HIP PLATES (CHP)

PRODUCT FEATURES:

Corner Hip Plates (CHP) are used to secure trusses or rafters to double top plates, effectively resisting uplift forces.

MATERIAL:

CHP1.81, CHP2 & CHP4 - 18 ga

COATING:

Galvanized (G185)

INSTALLATION:

- Use all specified fasteners in schedule to achieve the values indicated.

CODE COMPLIANCE:

Call QT for code approval information.

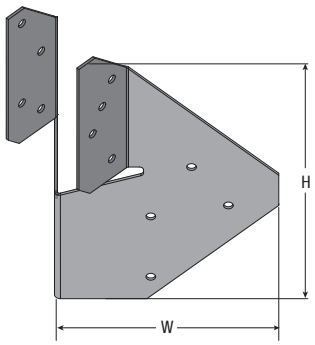

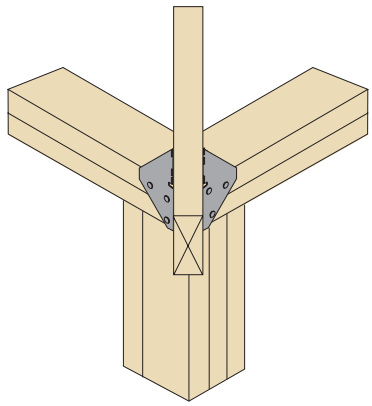

CHP

ALLOWABLE LOADS FOR CHP (LB)

Part No.	H	W	Fasteners				SP/D-F-L		HF/S-P-F	
			Trusses/Rafters		Top Plate		Uplift	F1	Uplift	F1
			Type	Qty	Type	Qty				
CHP1.81	6	3-9/16	10d x 1-1/2	6	10d x 1-1/2	6	825	410	710	355
CHP2										
CHP4	6-5/8	4-7/8	10d common	8	10d common	8	1,100	410	950	355

NOTES:

1. Allowable loads are provided for load duration factor (C_D) of 1.6. No further increase is permitted.

Innovative Girder Connectors Revolutionize Truss Uplift Load Solutions in Less Space

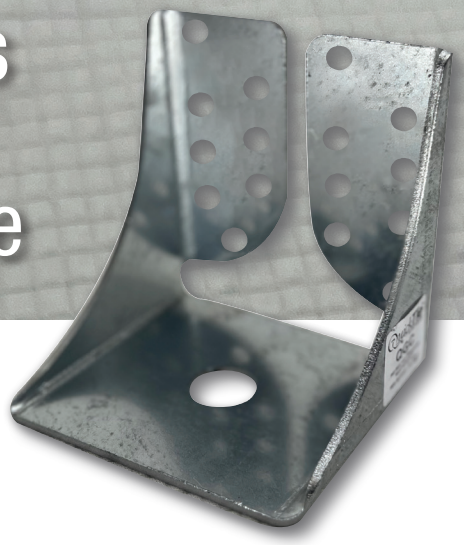

KEY ADVANTAGES OF QGC:

- Resists uplift in multi-ply girder trusses
- Compatible with all QT cables and threaded rods
- Perfect for heavy loads
- Used with girder trusses or rafter beams
- Fewer connections
- Easier to install and saves money



Quick Tie Products, Inc. produces a patented hold down system for wood frame and masonry construction which resists high wind and seismic forces. The system is easy to install, reducing parts needed and therefore saving time and money.

QuickTie™ HIGH WIND AND SEISMIC SYSTEMS

8 PATENTED PRODUCTS

Quicktieproducts.com