TENSION-COMPRESSION DRAG STRUT CONNECTORS (TCC)

PRODUCT FEATURES:

The Tension-Compression Drag Strut connector (TCC) is a load-transferring component that connects the girder/ beam /truss to the shear walls. It acts as a link between the horizontal members and the vertical shear walls.

MATERIAL:
TCC16L/R – 7 ga
TCC21L/R – 3 ga

COATING:
Spray Painted Primer (gray)

INSTALLATION:

- Use all specified fasteners in schedule to achieve values indicated.

CODE COMPLIANCE:
TER 0910-01, FL 3557

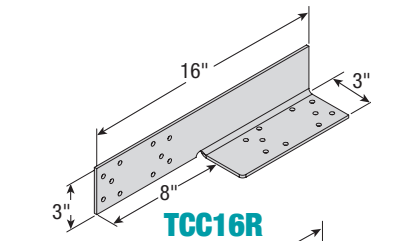

TCC16R

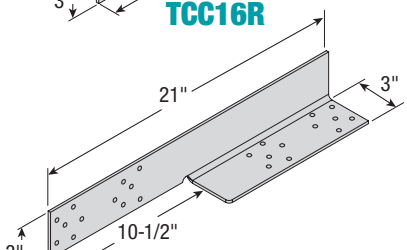

TCC21R

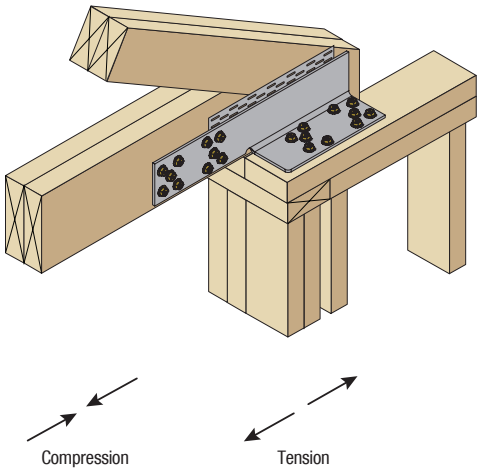

ALLOWABLE LOADS FOR TCC (LB)[1,2]

Part No.	Length, L (in.)	Fastener Type	Qty	SP (0.55)		DF-L (0.50)		SPF/ HF (0.42)	
				Compression	Tension	Compression	Tension	Compression	Tension
TCC16L	16	SWH3	20	2,600	3,890	2,410	3,605	2,095	3,130
TCC16R									
TCC21L	21	SWH3	24	4,370	5,780	4,370	5,500	3,920	4,720
TCC21R									

NOTES:
1. Allowable loads are provided for load duration factor (C_D) of 1.6. No further increase is permitted.
2. The structural wood screw, SWH3, is 1/4"x3".

TRUSS CLIPS (TR)

PRODUCT FEATURES:

The Truss Clips (TR1, TR2 & TR3) are specifically designed with vertical slots to secure and maintain the accurate alignment between a roof truss and non-load bearing walls.

MATERIAL:
TR1, TR2 & TR3* – 18 gauge

COATING:
Galvanized (G185)

INSTALLATION:

- Use all specified fasteners in schedule to achieve values indicated.
- Nails should be installed in the middle of the slot and not be driven flush with the clips.

CODE COMPLIANCE:
TER 0910-01, FL 3557

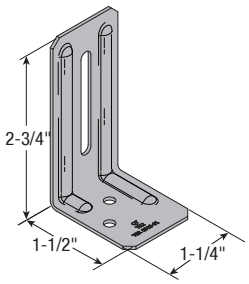

TR1

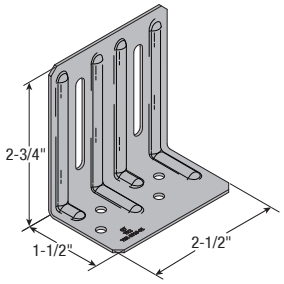

TR2

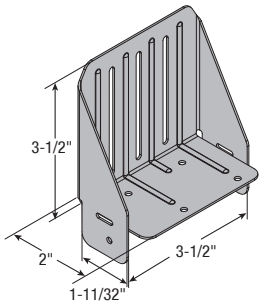

TR3

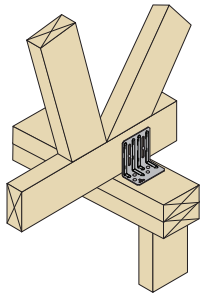

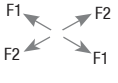

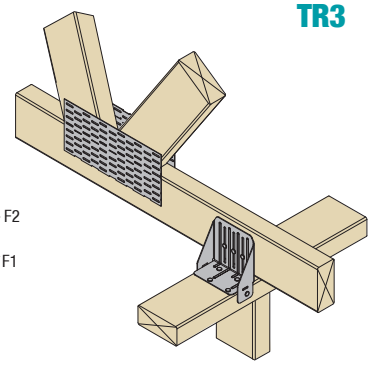

ALLOWABLE LOADS FOR TR (LB)[1,2]

Part No.	Width, W (in.)	Height, H (in.)	Depth, D (in.)	Fasteners				SOUTHERN PINE (SP) - C_D = 1.6							
				Top Plate		Truss/ Rafter (Slots)		No Gap[3]		Gap[3] ≤ 1/4"		1/4" < Gap[3] ≤ 1/2"		Gap[3] = 1-1/4"	
				Qty	Size	Qty	Size	F1	F2	F1	F2	F1	F2	F1	F2
TR1	1-1/4	2-3/4	1-7/8	2	8d (0.131" x 1-1/2")	1	8d (0.131" x 1-1/2")	85	55	65	50	45	40	-	-
TR2	2-1/2	2-3/4	1-7/8	4	8d (0.131" x 1-1/2")	2	8d (0.131" x 1-1/2")	155	195	115	195	80	185	-	-
TR3*	3-1/2	4-3/8	2	4	8d (0.148" x 3")	3	8d (0.148" x 3")	520	305	-	-	-	-	200	305

NOTES:
1. Allowable loads are provided for load duration factor (C_D) of 1.6. No further increase is permitted.
2. For no gap option, truss or rafter should bear on top plate to achieve the load values indicated.
3. To achieve F1 loads, roof truss clips must be present on both sides of the truss.
*Call QT for code approval information.