FOUNDATION ANCHOR STRAP (FASA)

PRODUCT FEATURES:

Foundation Anchor Strap (FASA4) is a cast-in-place connector designed for use as an alternative to anchor bolts. Each FASA4 strap has one end that is embedded into the concrete foundation. The other end extends above concrete foundation and is field bent over nominal 2x sill plates (with both legs bent around sill plate). Alternatively, one leg may be bent over the sill plate while the other leg is secured vertically over an adjacent stud.

MATERIAL:
FASA4 – 16 ga

COATING:
Galvanized (G185)

INSTALLATION:

- Use all specified fasteners in schedule to achieve values indicated.

CODE COMPLIANCE:
TER 0910-01, FL 3557

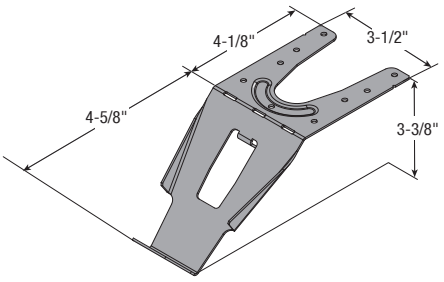

FASA

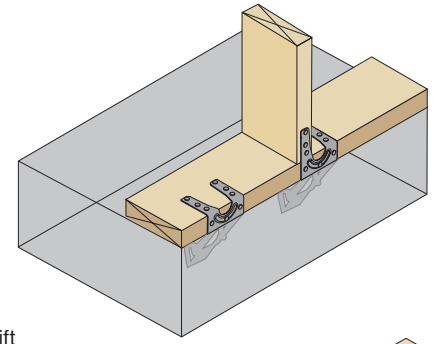

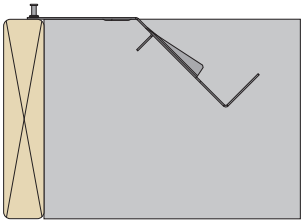

Installation for inside of wall

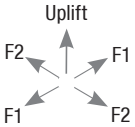

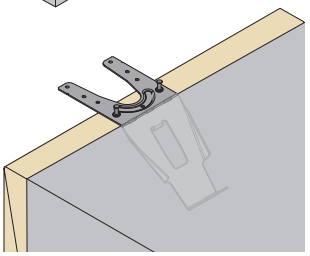

Installation for sill plate and studs

FASA4 ALLOWABLE TENSION AND SHEAR VALUES (ASD) – CONCRETE AND WOOD

Part No.	Installation Type[6]	Fasteners				Allowable Loads (lb)[1,3,4,5]					
		Type	Sill Plate[2]		Stud	Wind and Seismic Design Category (SDC) A-B			Seismic Design Category (SDC) C-F		
			Narrow Face	Wide Face		Uplift	F1 Parallel to Wall	F2 Perpendicular to Wall	Uplift	F1 Parallel to Wall	F2 Perpendicular to Wall
FASA4	Standard	10d x 1-1/2" (0.148 x 1.50")	3	6	-	1,310	1,620	1,250	1,150	1,360	1,190
	One Leg Up		3	3	3	1,050	1,260	1,135	920	1,100	1,135

NOTES:

1. Allowable loads are provided for a load duration factor (C_D) of 1.6. No further increase is permitted.
2. Foundation plates or sills shall be pressure-preservative treated Southern Pine (PPT-SP) and shall comply with IBC Section 2304.3.1 and IRC Section R403.1.6.
3. Allowable loads are only applicable to uncracked concrete and are based on a minimum stem wall thickness of 6", minimum distance from the end of the concrete stem wall to the center line of the FASA4 anchor of 4".
4. Minimum compressive strength of concrete is 2,500 psi.
5. Wood framing members (studs) with which the connectors are installed, "One Leg Up," shall have a published specific gravity (SG) of 0.55.

EPOXY ANCHORS

PRODUCT FEATURES:

Epoxy Anchors are used as foundation anchors to resist shear and wind uplifts.

ASSEMBLY:
Threaded Rod - ASTM A36 Steel, Zinc Plated
Hex Nut - Grade 2, Zinc Plated
Square Washer - ASTM A653 Grade 33 or A36 steel, Galvanized (G60 or better), Zinc Plated or GEOMET® (Superior to HDG).

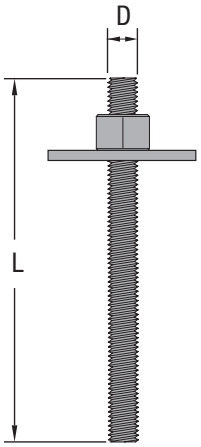

EA

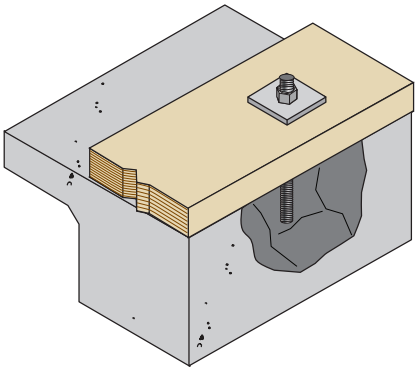

Part No.	Rod Size (D)	Length (L)*	Description
EA.5x6NS	1/2"	6"	1/2"x 6" Threaded Rod, Hex nut and 2 x 2 Galvanized (G185) washer
EA.5x6NS (3x3GEO)	1/2"	6"	1/2"x 6" Threaded Rod, Hex nut and 3 x 3 GEOMET® washer
EA.5x6NS (3x3Z)	1/2"	6"	1/2"x 6" Threaded Rod, Hex nut and 3 x 3 Zinc Plated (G60) washer
EA.5x8NS	1/2"	8"	1/2"x 8" Threaded Rod, Hex nut and 2 x 2 Galvanized (G185) washer
EA.625x6NS	5/8"	6"	5/8"x 6" Threaded Rod, Hex nut and 2 x 2 Galvanized (G185) washer
EA.625x8NS	5/8"	8"	5/8"x 8" Threaded Rod, Hex nut and 2 x 2 Galvanized (G185) washer

*Other sizes and lengths available upon request