WALL TIES (WT)

PRODUCT FEATURES:

QuickTie™ Wall Ties (WT6, WT8 & WT10) are designed to make concrete wall construction easier, faster, and more reliable. Made from high-strength Grade 80 steel, they help maintain consistent wall thickness, hold the formwork in place, and resist concrete pressure throughout the pouring and curing process.

MATERIAL:
WT – 14 Gauge

COATING:
None

FAILURE LOAD:
7,200 lb.

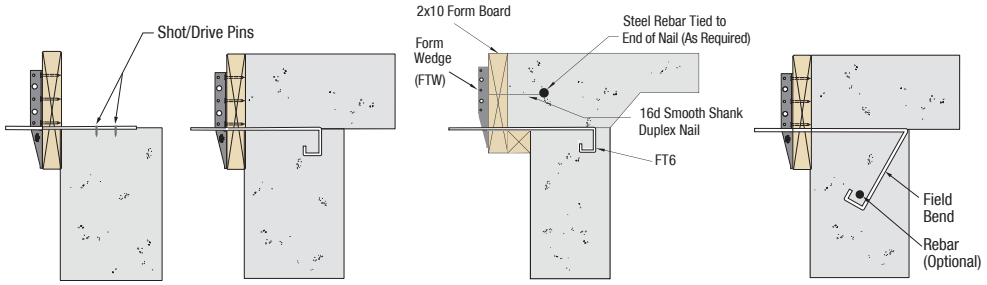

Concrete Wall - FT6S Assembly | Concrete Wall - FT6 Assembly | Concrete Wall - FT6 Extended Edge of Slab | Concrete Wall - FT8 Overbend Assembly

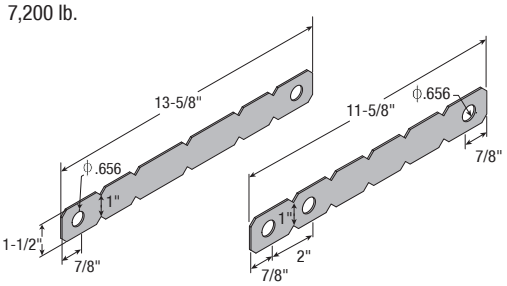

WT10 **WT6-8**

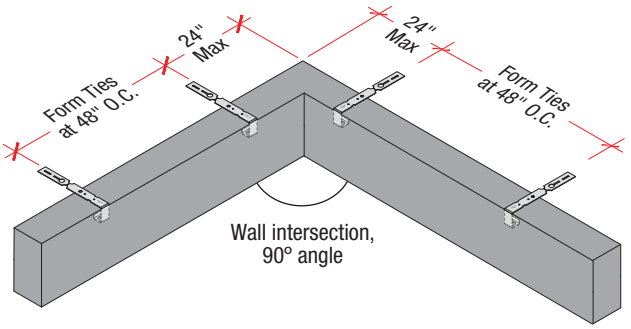

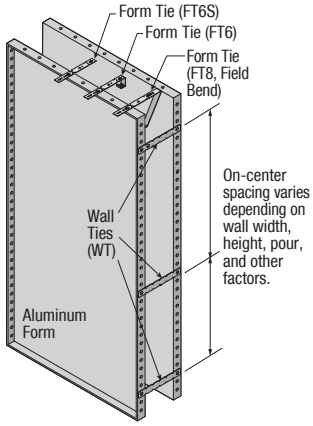

CONCRETE WALL WITH FORM TIES (FT8, FT6 & FT6S)



Concrete slab formwork w/ Form Ties



Close-up view - Form Ties (FT8, FT6 or FT6S)



Slab concrete poured



Slab formwork removed

CMU SADDLE ASSEMBLY

PRODUCT FEATURES:

The CMU Saddle Assembly is designed to allow for easy installation and placement of Anchor Bolts when used with QuickTie™ Cables in concrete masonry wall applications. The CMU Saddle Assembly comes in eight different sizes to cover the four QuickTie™ sizes and 8" and 12" wide masonry walls. Each CMU Saddle Assembly includes saddle strap, anchor bolt and coupling.

ASSEMBLY:
Saddle Strap - 20 Gauge, Galvanized (G90)
Anchor Bolt - ASTM A36 Steel, Zinc Plated
Couplers - Grade 2, Zinc Plated

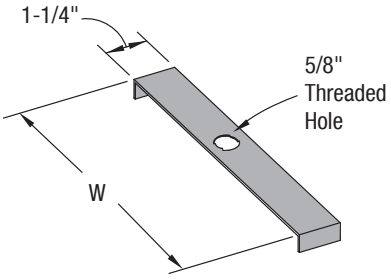

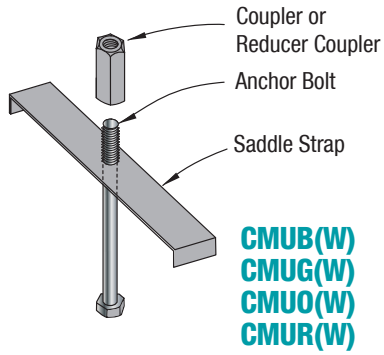

CMUB(W)
CMUG(W)
CMUO(W)
CMUR(W)

Part No.	Width (W)	Description
CMUB8	7-5/8"	8" CMU Wall, 20 Ga. Strap, 5/8" Anchor Bolt & Reducer Coupler
CMUB12	11-5/8"	12" CMU Wall, 20 Ga. Strap, 5/8" Anchor Bolt & Reducer Coupler
CMUG8	7-5/8"	8" CMU Wall, 20 Ga. Strap, 5/8" Anchor Bolt & Reducer Coupler
CMUG12	11-5/8"	12" CMU Wall, 20 Ga. Strap, 5/8" Anchor Bolt & Reducer Coupler
CMUO8	7-5/8"	8" CMU Wall, 20 Ga. Strap, 5/8" Anchor Bolt & Coupler
CMUO12	11-5/8"	12" CMU Wall, 20 Ga. Strap, 5/8" Anchor Bolt & Coupler
CMUR8	7-5/8"	8" CMU Wall, 20 Ga. Strap, 5/8" Anchor Bolt & Reducer Coupler
CMUR12	11-5/8"	12" CMU Wall, 20 Ga. Strap, 5/8" Anchor Bolt & Reducer Coupler

