FORM TIES (FT8 & FT6), FORM TIE - SHOT (FT6S) AND FORM TIE WEDGE (FTW) (U.S. PATENT NO. 9,834,945)

PRODUCT FEATURES:

Form Tie (FT8 & FT6), Form Tie-Shot (FT6S) and Form Wedge (FTW) anchors provide easy installation for the foundation contractor or framer. They can be used in either stem walls or slabs. They are easily attached to the form prior to placement of concrete.

MATERIAL:

FT8, FT6, FT6S - 16 gauge

FTW - 12 gauge

COATING:

Galvanized

INSTALLATION:

Form Tie Installation Video

PART NO.	CARTON QTY.
FT8	72
FT6, FT6S	100
FTW	100

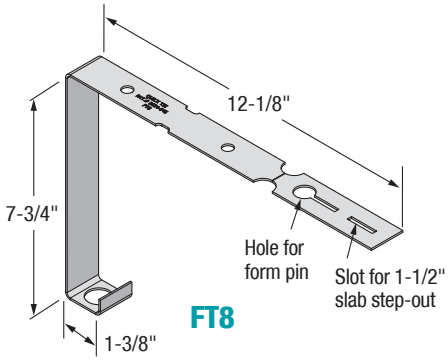

FT8

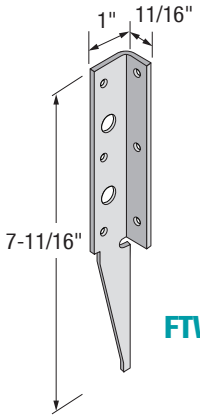

FTW

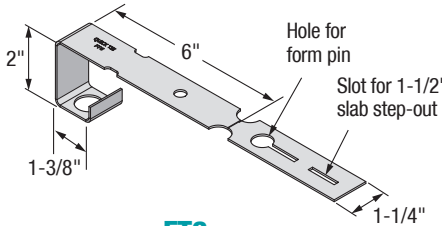

FT6

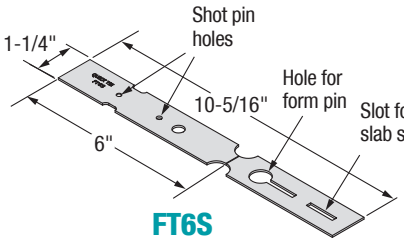

FT6S

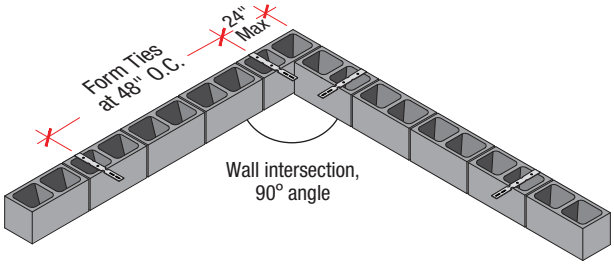

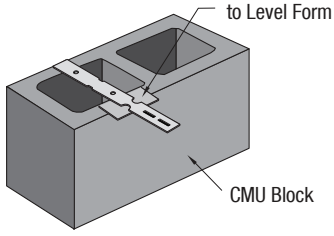

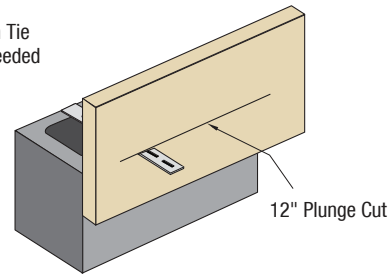

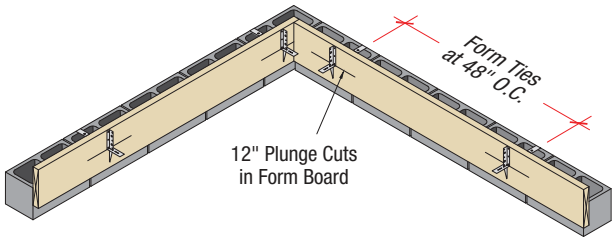

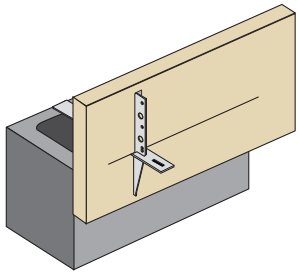

Eliminates most, if not all, bracing



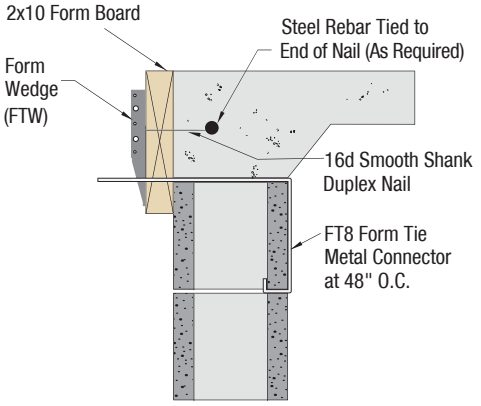

CMU Stem Wall - Edge of Slab

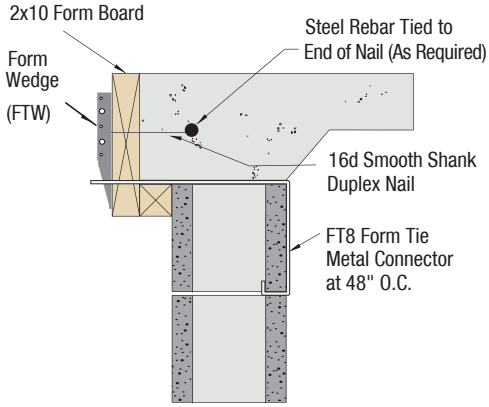

CMU Stem Wall - Extended Edge of Slab