CORNER HIP PLATES (CHP)

PRODUCT FEATURES:

Corner Hip Plates (CHP) are used to secure trusses or rafters to double top plates, effectively resisting uplift forces.

MATERIAL:

CHP1.81, CHP2 & CHP4 - 18 ga

COATING:

Galvanized (G185)

INSTALLATION:

- Use all specified fasteners in schedule to achieve the values indicated.

CODE COMPLIANCE:

Call QT for code approval information.

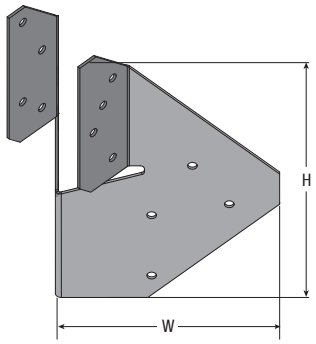

CHP

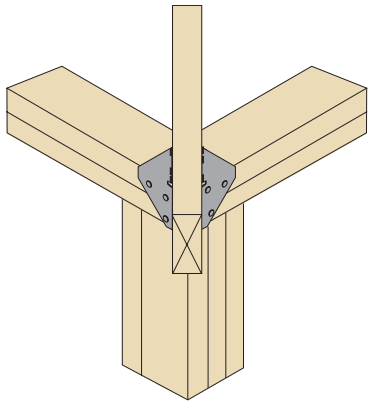

ALLOWABLE LOADS FOR CHP (LB)

Part No.	H	W	Member Size	Fasteners				SP/D-F-L		HF/S-P-F	
				Trusses/Rafters		Top Plate		Uplift	F1	Uplift	F1
				Type	Qty	Type	Qty				
CHP1.81	6	3-9/16	1-3/4	10d x 1-1/2	6	10d x 1-1/2	6	615	205	710	265
CHP2			2x								
CHP4	6-5/8	4-7/8	4x	10d common	8	10d common	8	1,100	410	950	355

NOTES:

1. Allowable loads are provided for load duration factor (C_D) of 1.6. No further increase is permitted.

JACK TRUSS CONNECTOR (JTC)

PRODUCT FEATURES:

JTCs, or Jack Truss Connectors, are designed to be easily skewable, allowing them to be field-bent to various angles for a wide range of applications.

MATERIAL:

JTC - 16 ga

COATING:

Galvanized (G185)

INSTALLATION:

- Use all specified fasteners in schedule to achieve load values indicated.

CODE COMPLIANCE:

Call QT for code approval information

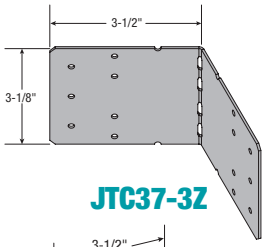

JTC37-3Z

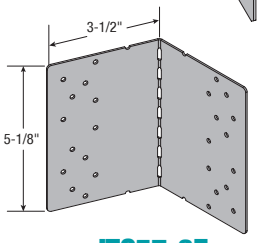

JTC57-3Z

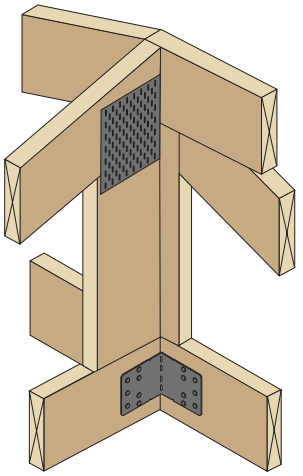

ALLOWABLE LOADS FOR JTC (LB)[1,2]

Part No.	W (in.)	H (in.)	Fastener Type	Fastener Qty		Allowable Loads (lb)					
				Header	Joist	SP/DF-L (SG = 0.50)			HF/SPF (SG = 0.42)		
						0°	1° - 60°	60° - 68°	0°	1° - 60°	60° - 68°
JTC37-3Z	7	3-1/8	8d x 1-1/2	7	7	515	430	375	440	365	325
JTC57-3Z	7	5-1/8	8d x 1-1/2	13	13	865	815	785	745	700	675

NOTES:

1. Allowable loads are applicable for both gravity and uplift forces
2. For back-to-back installation, the tabulated values are multiplied by a factor of 0.70.