TENSION-COMPRESSION DRAG STRUT CONNECTORS (TCC)

PRODUCT FEATURES:

The Tension-Compression Drag Strut connector (TCC) is a load-transferring component that connects the girder/ beam /truss to the shear walls. It acts as a link between the horizontal members and the vertical shear walls.

MATERIAL:
TCC16L/R - 7 ga
TCC21L/R - 3 ga

COATING:
Spray Painted Primer (gray)

INSTALLATION:

- Use all specified fasteners in schedule to achieve values indicated.

CODE COMPLIANCE:
TER 0910-01, FL 3557

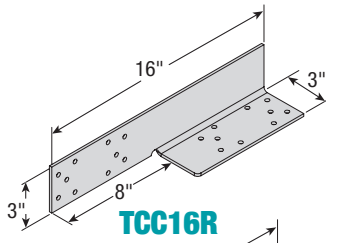

TCC16R

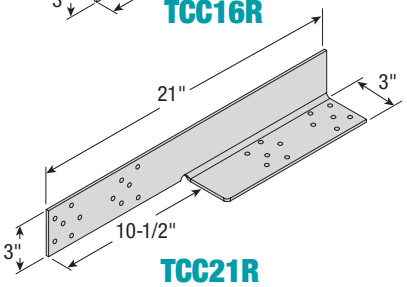

TCC21R

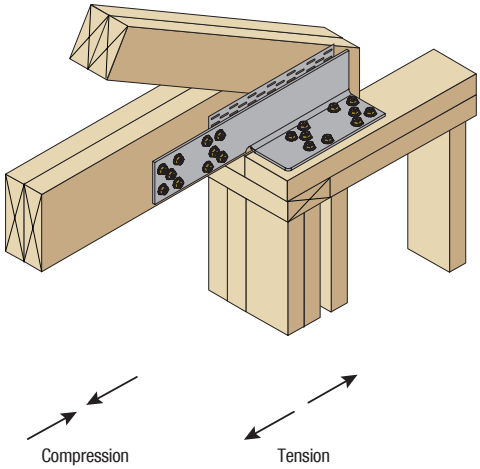

ALLOWABLE LOADS FOR TCC (LB)[1,2]

Part No.	Length, L (in.)	Fastener Type	Qty	SP (0.55)		DF-L (0.50)		SPF/ HF (0.42)	
				Compression	Tension	Compression	Tension	Compression	Tension
TCC16L TCC16R	16	SWH3	20	2,600	3,890	2,410	3,605	2,095	3,130
TCC21L TCC21R	21	SWH3	24	4,370	5,780	4,370	5,500	3,920	4,720

NOTES:
1. Allowable loads are provided for load duration factor (C_D) of 1.6. No further increase is permitted.
2. The structural wood screw, SWH3, is 1/4"x3".

TRUSS CLIPS (TR)

PRODUCT FEATURES:

The Truss Clips (TR1, TR2 & TR3) are specifically designed with vertical slots to secure and maintain the accurate alignment between a roof truss and non-load bearing walls.

MATERIAL:
TR1, TR2 & TR3* - 18 ga

COATING:
Galvanized (G185)

INSTALLATION:

- Use all specified fasteners in schedule to achieve values indicated.
- Nails should be installed in the middle of the slot and not be driven flush with the clips.

CODE COMPLIANCE:
TER 0910-01, FL 3557

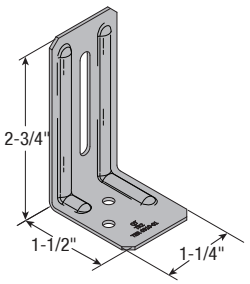

TR1

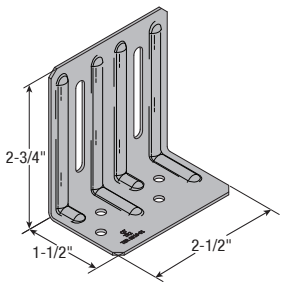

TR2

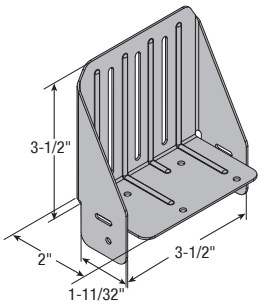

TR3

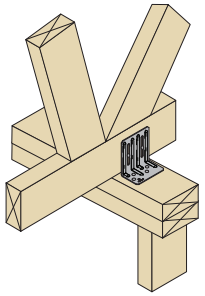

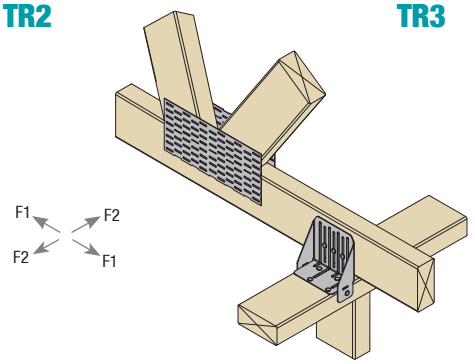

ALLOWABLE LOADS FOR TR (LB)[1,2]

Part No.	Width, W (in.)	Height, H (in.)	Depth, D (in.)	Fasteners				SOUTHERN PINE (SP) - C_D = 1.6							
				Top Plate		Truss/ Rafter (Slots)		No Gap[3]		Gap[3] ≤ 1/4"		1/4" < Gap[3] ≤ 1/2"		Gap = 1-1/4"	
				Qty	Size	Qty	Size	F1	F2	F1	F2	F1	F2	F1	F2
TR1	1-1/4	2-3/4	1-7/8	2	8d (0.131" x 1-1/2")	1	8d (0.131" x 1-1/2")	85	55	65	50	45	40	-	-
TR2	2-1/2	2-3/4	1-7/8	4	8d (0.131" x 1-1/2")	2	8d (0.131" x 1-1/2")	155	195	115	195	80	185	-	-
TR3*	3-1/2	4-3/8	2	4	8d (0.148" x 3")	3	8d (0.148" x 3")	520	305	-	-	-	-	200	305

NOTES:
1. Allowable loads are provided for load duration factor (C_D) of 1.6. No further increase is permitted.
2. For no gap option, truss or rafter should bear on top plate to achieve the load values indicated.
3. TR1 & TR2: To achieve F1 loads, roof truss clips must be present on both sides of the truss.
*Call QT for code approval information.