U HANGERS (UMH, UHH & UHD SERIES)

PRODUCT FEATURES:

U-Hangers are face mount joist hangers used to resist gravity loads and uplift loads due to wind in one-, two- and three-ply joist assemblies in light-frame wood construction.

MATERIAL:

UMH Series - 16 ga
UHH Series - 14 ga
UHD Series - 12 ga

COATING:

Galvanized (G185)

INSTALLATION:

- Use all specified fasteners in schedule to achieve values indicated.
- All U-Hangers have slant nailing. These must be used to achieve published load values. The nails must be driven at an angle (approx. 41°) in the joist and into the header.
- For all Hangers, use 16d common nails (0.162 x 3-1/2") for hanger-to-header attachment.
- Hangers are not allowed to be modified.
- Hangers are not designed for welded applications.

CODE COMPLIANCE:

TER 1811-03; FL 3557

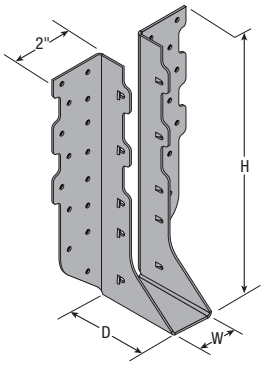

UMH

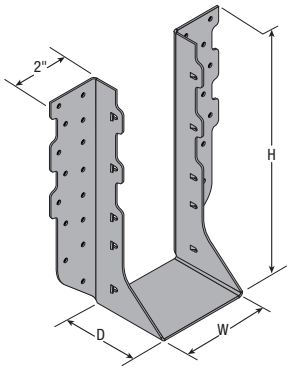

UHH

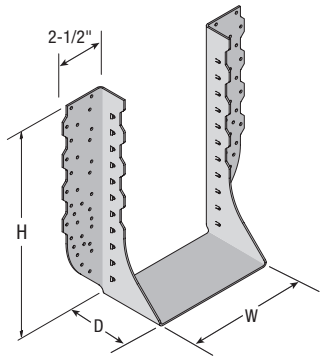

UHD

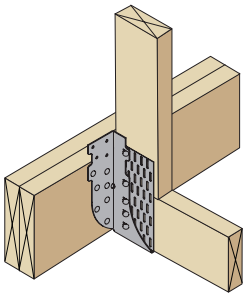

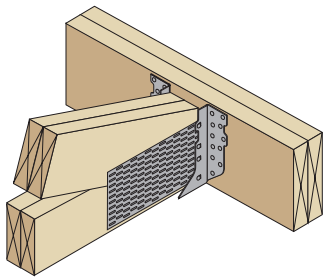

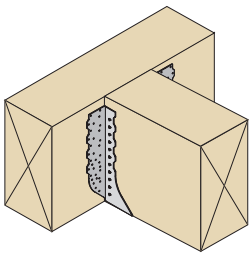

ALLOWABLE LOADS FOR UMH & UHH SERIES HANGERS (LB)[1,2,3]

	Joist Size		Part No.			QUICKTIE PART ATTRIBUTES																			
						Dimensions (in.)			Fasteners				SP (SG = 0.55)				DF-L (SG = 0.50)				HF/SPF (SG = 0.42)			
				Reference No.[4]					Header		Joist		Floor	Roof	Roof	Uplift	Floor	Roof	Roof	Uplift	Floor	Roof	Roof	Uplift
			QT	Simpson® Hardware (SH)	MiTek® Hardware (MH)	Width, W	Height, H	Depth, D	Qty	Size	Qty	Size	1.0	1.15	1.25	1.6	1.0	1.15	1.25	1.6	1.0	1.15	1.25	1.6
UMH (16 ga)	2x6	1-ply	UMH26	HUS26, HUS26Z	HUS26, HUS26-TZ	1-5/8	5-3/8	3	14	16d	8	16d	3,050	3,505	3,610	1,440	2,820	3,245	3,525	1,395	2,440	2,805	3,050	1,215
	2x8	1-ply	UMH28	HUS28, HUS28Z	HUS28, HUS28-TZ	1-5/8	7	3	22	16d	10	16d	4,895	5,125	5,175	2,075	4,780	4,995	5,135	1,950	3,315	3,770	3,895	1,690
	2x10	1-ply	UMH210	HUS210, HUS210Z	HUS210, HUS210-TZ	1-5/8	9	3	30	16d	12	16d	6,740	6,740	6,740	2,710	6,740	6,740	6,740	2,505	4,190	4,735	4,735	2,160
UHH (14 ga)	(2) 2x6	2-ply	UHH26-2	HHUS26-2, HHUS26-2Z	THD26-2	3-5/16	5-3/8	3	14	16d	6	16d	2,905	3,340	3,630	1,745	2,685	3,090	3,360	1,615	2,325	2,675	2,905	1,395
	(2) 2x8	2-ply	UHH28-2	HHUS28-2, HHUS28-2Z	THD28-2, THD28-2TZ	3-5/16	7-1/4	3	22	16d	8	16d	4,950	5,170	5,315	2,535	4,840	5,045	5,180	2,345	3,185	3,360	3,475	2,025
	(2) 2x10	2-ply	UHH210-2	HHUS210-2, HHUS210-2Z	THD210-2, THD210-2TZ	3-5/16	9-3/16	3	30	16d	10	16d	6,995	6,995	6,995	3,320	6,995	6,995	6,995	3,070	4,040	4,040	4,040	2,655
	(3) 2x10	3-ply	UHH210-3	HHUS210-3	THD210-3	4-15/16	8-7/8	3	30	16d	10	16d	5,910	6,800	6,985	3,460	5,470	6,290	6,475	3,215	4,825	5,420	5,420	2,800
	(4) 2x10	4-ply	UHH210-4	HHUS210-4	THD210-4	6-1/8	8-7/8	3	30	16d	10	16d	5,910	6,800	6,985	3,460	5,470	6,290	6,475	3,215	4,825	5,420	5,420	2,800
	4x6	1-ply	UHH46	HHUS46, HHUS46Z	THD46, THD46-TZ	3-5/8	5-1/8	3	14	16d	6	16d	2,905	3,340	3,630	1,745	2,685	3,090	3,360	1,615	2,325	2,675	2,905	1,395
	4x8	1-ply	UHH48	HHUS48, HHUS48Z	THD48, THD48-TZ	3-5/8	7-1/8	3	22	16d	8	16d	4,950	5,170	5,315	2,535	4,840	5,045	5,180	2,345	3,185	3,360	3,475	2,025
	4x10	1-ply	UHH410	HHUS410, HHUS410Z	THD410, THD410-TZ	3-5/8	9	3	30	16d	10	16d	6,995	6,995	6,995	3,320	6,995	6,995	6,995	3,070	4,040	4,040	4,040	2,655
	6x10	1-ply SCL	UHH610	HHUS5.50/10	THD610	5-1/2	9	3	30	16d	10	16d	5,910	6,800	6,975	3,460	5,470	6,290	6,630	3,215	4,825	5,535	5,535	2,850
	7x10	1-ply SCL/ Glulam	UHH7210	HHUS7.25/10	THD7210	7-1/4	9	3-5/16	30	16d	10	16d	5,910	6,800	6,975	3,460	5,470	6,290	6,630	3,215	4,825	5,535	5,535	2,850

Continued on next page.

NOTES:

1. Nails designated as 16d shall be 16d common nails (0.162" x 3.5", F_{yb} = 90,000 psi) and 10d shall be 10d common nails (0.148" x 3", F_{yb} = 90,000 psi).
2. Allowable loads are provided for load duration factor (C_D) of 1.0, 1.15, 1.25 and 1.6.
3. Allowable loads labeled "Floor" and "Roof" represent gravity loads.
4. These Reference Numbers above are for the purpose of enabling our customers to identify the QuickTie™ alternative to specified product names, but the attributes of the products references (particularly load values) may differ from the QuickTie™ part. Please note that product comparison via Reference Numbers is for general application comparison only. Reference Numbers should not be used as an apples-to-apples substitution tool. Customers are solely responsible for comparing specific load values, fastener schedules, anchoring requirements, material specifications, and other factors when determining the suitability of use of any particular product. QuickTie™ makes no claim, stated or implied, of suitability for purpose or qualification for usage of our products that may be substituted for a specified product. Any specification, submittal, or change to a specified product should be approved in writing by the designer or Engineer of Record (EOR). MiTek® and Simpson Strong-Tie® are registered trademarks of their respective companies, with which QuickTie™ is unaffiliated, and neither of whom endorse or approve use of their product names in this catalog as "reference numbers".