TOP FLANGE HEAVY BEAM HANGERS (TFHBH)

PRODUCT FEATURES:

Top Flange Header Beam Hangers (TFHBH) are heavy header-to-beam connectors used for supporting and transferring high loads from the LVL, LSL and PSL beams to the header.

MATERIAL:

TFHBH35X – 7 ga

TFHBH55X – 7 ga (Saddle) & 3 ga (Top Flange)

COATING:

Spray Painted Primer (gray)

CODE COMPLIANCE:

Call QT for code approval information.

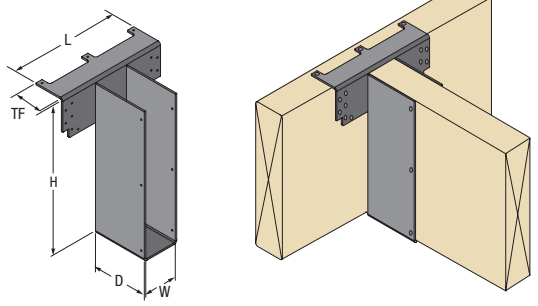

TFHBH35X

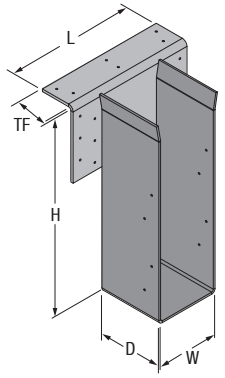

TFHBH55X

ALLOWABLE LOADS FOR TOP FLANGE HEAVY BEAM HANGERS (LB)*

Part No.	Hanger Dimensions (in.)					Fastener Quantity					Allowable loads (lb)*	
						Header			Joist		SP (0.55) / DF-L (0.50)	
	Height, H	Width, W	Depth, D	Length, L	Top Flange TF	Top	Face	Type	Qty	Type	Gravity (C_D = 1.0)	Uplift (C_D = 1.6)
TFHBH3512	12	3-5/8	6	12	3-1/8	3	12	16d	6	16d	10,545	1,490
TFHBH3514	14											
TFHBH3516	16											
TFHBH3518	18											
TFHBH3520	20											
TFHBH3595	9-1/2											
TFHBH5514	14	5-9/16	6	12	3-1/8	6	12	16d	8	16d	10,545	1,490
TFHBH5516	16											
TFHBH5518	18											

*For other sizes, contact QT. Allowable loads per NDS nail calculations, call QT for code approval information.

FACE MOUNT GIRDER HANGERS - ULG, UMG & UHG SERIES

PRODUCT FEATURES:

The ULG, UMG, and UHG series hangers are light-, medium-, and heavy-capacity girder hangers designed to resist high wind uplift and gravity loads by using wood screws (SWH) instead of standard nails. These are available with one or both flanges inverted for corner attachments or where a concealed option is needed.

MATERIAL:

ULG & UMG - 10 ga

UHG - 7 ga

COATING:

Spray-painted gray primer

INSTALLATION:

- Use all specified fasteners in schedule to achieve values indicated.

CODE COMPLIANCE:

Call QT for code approval information.

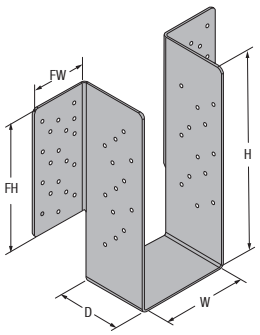

ULG/UMG/UHG

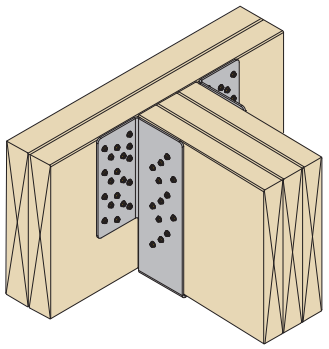

GIRDER HANGERS - ALLOWABLE COMPRESSION AND TENSION VALUES[1,2]

Part No.	Steel Thick. (ga)	Width W (in.)	Height H[2] (in.)	Depth D (in.)	Fl. Height FH (in.)	Fl. Width FW (in.)	Fasteners				Allowable loads (SP/DF-L)			Allowable loads (HF/SPF)		
							Face		Joist		Uplift	Gravity		Uplift	Gravity	
							Qty	Type	Qty	Type	1.6	1	1.15/1.25	1.6	1	1.15/1.25
ULG325	10	3-1/4	8 to 30	4-1/2	7-3/8	3-1/4	16	SWH3	12	SWH3	7,255	8,060	8,060	6,090	6,770	6,770
ULG363	10	3-5/8														
ULG525	10	5-1/4														
UMG363	10	3-5/8	9-1/4 to 30	4-1/2	8-5/8	4	24	SWH3	16	SWH3	8,060	10,580	10,580	6,770	8,885	8,885
UMG525	10	5-1/4														
UMG550	10	5-1/2														
UMG562	10	5-5/8														
UMG700	10	7														
UHG363	7	3-5/8	11 to 30	5-1/4	10-3/8	4-3/4	36	SWH3	24	SWH3	10,135	14,255	14,255	8,510	11,970	11,970
UHG525	7	5-1/4														
UHG550	7	5-1/2														
UHG562	7	5-5/8														
UHG700	7	7														
UHG725	7	7-1/4														
UHG900	7	9														
UHG110	7	11														

NOTES:

1. Allowable loads are provided for a load duration factor (C_D) of 1.6. No further increase is permitted.
2. Customer to specify the joist height. Other seat widths and inverted flange parts available upon request.