TOP FLANGE HANGERS (TFLP & TFH)

PRODUCT FEATURES:

Top Flange U-Hanger Series are top mount joist hangers used to resist gravity loads and uplift loads due to wind in single or multi-ply joist assembly in light-frame construction.

MATERIAL:
TFLP Series - 18 ga
TFH Series - 14 ga

COATING:
Galvanized (G185)

CODE COMPLIANCE:
TER 1811-03, FL 3557

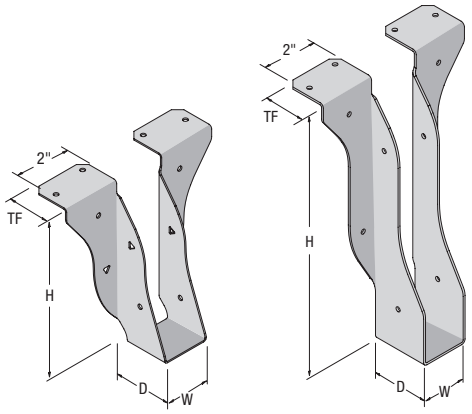

TFLP TFH

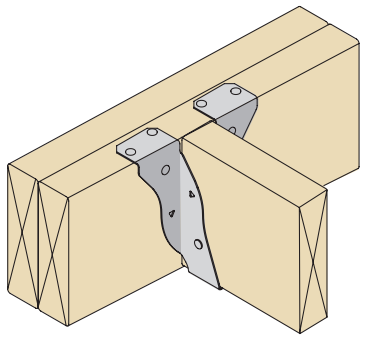

ALLOWABLE LOADS FOR TOP FLANGE HANGERS (LB)

Part No.	Joist Size (IN.)	Hanger Dimensions (in.)				Fasteners				SP (SG = 0.55)				DF-L (SG = 0.50)				HF/SPF (SG = 0.42)			
		Width, W	Height, H	Depth, D	Top Flange TF	Header		Joist		Floor	Roof	Roof	Uplift	Floor	Roof	Roof	Uplift	Floor	Roof	Roof	Uplift
						Qty.	Size	Qty.	Size	1.0	1.15	1.25	1.6	1.0	1.15	1.25	1.6	1.0	1.15	1.25	1.6
TFLP26	2x6	1-9/16	5-3/8	1-1/2	1-5/16	6	16d Common	2	10d x 1-1/2	1,280	1,280	1,280	230	1,245	1,245	1,245	230	945	945	945	165
TFLP28	2x8		7-1/4																		225
TFH210	2x10	1-9/16	9-3/16	2	1-7/16	8	16d Common	4	10d x 1-1/2	1,765	1,765	1,765	380	1,535	1,535	1,535	380	1,165	1,165	1,165	285
TFH212	2x12		11-1/8																		
TFH214	2x14		13-1/8																		

NOTES:
1. Nails designated as 16d shall be 16d common nails (0.162" x 3.5", F_{yb} = 90,000 psi).
2. Allowable loads are provided for load duration factor (C_D) of 1.0, 1.15, 1.25 and 1.6.
3. Allowable loads labeled "Floor" and "Roof" represent gravity loads.

TOP FLANGE HEAVY HANGERS - TFHD SERIES

PRODUCT FEATURES:

The Top Flange Heavy (TFHD) U-Hanger Series are top-mounted joist hangers that resist gravity and wind uplift loads in single- or multi-ply joist assemblies for light-frame construction.

MATERIAL:
TFHD - 12 ga

COATING:
Galvanized (G185)

INSTALLATION:
- Use all specified fasteners in schedule to achieve values indicated.

CODE COMPLIANCE:
Call QT for code approval information.

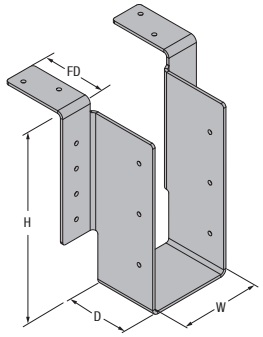

TFHD

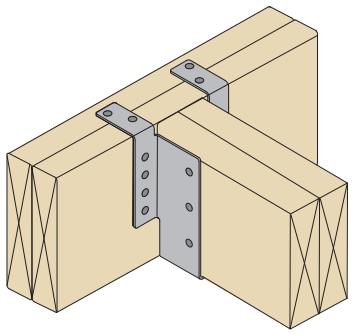

TOP FLANGE HEAVY HANGERS - ALLOWABLE COMPRESSION AND TENSION VALUES[1]

Part No.	Width W (in.)	Height H[2] (in.)	Depth D (in.)	Fl. Depth FD (in.)	Fasteners				Allowable loads (SP/DF-L)			
					Header		Joist		Uplift	Gravity		
					Qty	Type	Qty	Type	1.6	1	1.15	1.25
TFHD26	1-/9/16	5-3/8	2-1/2	2-1/2	12	16d	6	10d x 1-1/2	960	2,635	2,800	2,915
TFHD28		7-1/8			12	16d	6	10d X 1-1/2	960	2,915	3,125	3,265
TFHD210		9-1/8			14	16d	8	10d X 1-1/2	1,280	2,915	3,125	3,265
TFHD212		11			18	16d	8	10d x 1-1/2	1,280	3,475	3,770	3,965
TFHD26-2	3-1/8	5-3/8	2-1/2	2-1/2	12	16d	6	16d	1,220	4,150	4,315	4,430
TFHD28-2		7-1/8			12	16d	6	16d	1,220	4,150	4,315	4,430
TFHD210-2		9-1/8			16	16d	8	16d	1,625	4,710	4,960	5,130
TFHD212-2		11			18	16d	8	16d	1,625	4,990	5,280	5,480
TFHD46	3-9/16	5-3/8	2-1/2	2-1/2	12	16d	6	16d	1,220	4,150	4,315	4,430
TFHD410		9-1/8			16	16d	8	16d	1,625	4,710	4,960	5,130
TFHD412		11			16	16d	8	16d	1,625	4,710	4,960	5,130
TFHD414		13			20	16d	10	16d	2,030	5,270	5,605	5,830
TFHD610	5-1/2	9-1/8	2-1/2	2-1/2	16	16d	8	16d	1,625	4,710	4,960	5,130
TFHD612		11			18	16d	8	16d	1,625	4,990	5,280	5,480
TFHD614		13			20	16d	10	16d	2,030	5,270	5,605	5,830

NOTES:
1. Allowable loads are provided for a load duration factor (C_D) of 1.6. No further increase is permitted.

 ©Copyright 2026 Quick Tie Products, Inc. | Phone (904) 281-0525