NAIL PROTECTION PLATES (NPP)

PRODUCT FEATURES:

The NPP Series protects electrical wires and plumbing lines from damage caused by nails, screws, and other piercing hazards. Built-in prongs provide fast, secure installation and meet IBC, IRC, IPC, and NEC code requirements.

MATERIAL:

NPP1, NPP2 - 14 ga
NPP58, NPP516 - 16 ga

COATING:

Galvanized (G185)

INSTALLATION:

- Use all specified fasteners in schedule to achieve values indicated and/or install using the built-in prongs.

CODE COMPLIANCE:

Call QT for code approval information.

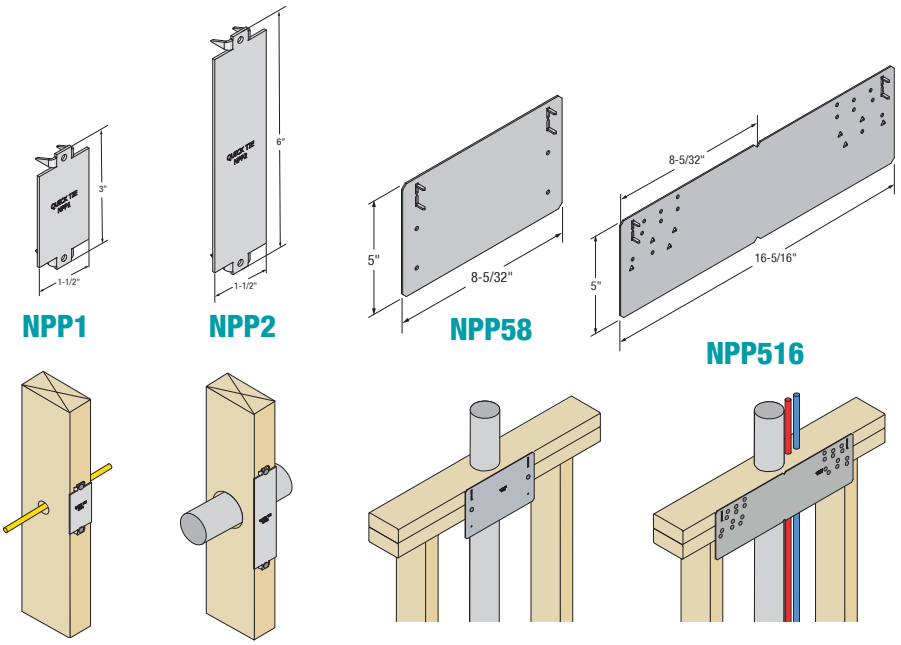

NPP1 NPP2 NPP58 NPP516

ALLOWABLE LOADS FOR NPP[1]

Part No.	Width, W (in.)	Length, L (in.)	Fasteners		Allowable Tension	
			Qty	Type	SP/DF-L	HF/SPF
NPP1	1-1/2	3	-	-	-	-
NPP2	1-1/2	6	-	-	-	-
NPP58	5	8-5/32	-	-	-	-
NPP516	5	16-5/16	12	16d	1,390	1,200
			16	16d	1,855	1,600
			24	16d	2,780	2,400

NOTES:

1. Allowable loads are provided for a load duration factor (C_D) of 1.6. No further increase is permitted.

TENSION-COMPRESSION STRAPS (TCS)

PRODUCT FEATURES:

Tension-Compression Straps (TCS) are connectors designed to bridge/repair discontinuous wood members (i.e. top plates, studs, trusses, etc.) by transferring axial loads from one member to the other connected member. TCS18-3Z strap may span gaps up to 4-1/2" and the TCS20-3Z may span gaps up to 6". Both straps have a nominal width of 1-1/2" which allows installation on the narrow face of nominal 2x wood members.

MATERIAL:

TCS - 14 ga

COATING:

Galvanized (G185)

INSTALLATION:

- Use all specified fasteners in schedule to achieve values indicated.

CODE COMPLIANCE:

TER 0910-01, FL 3557

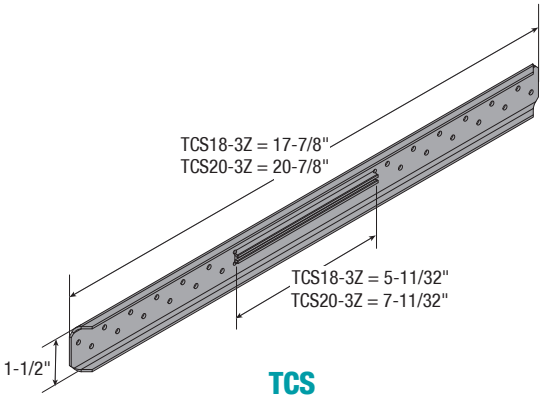

TCS

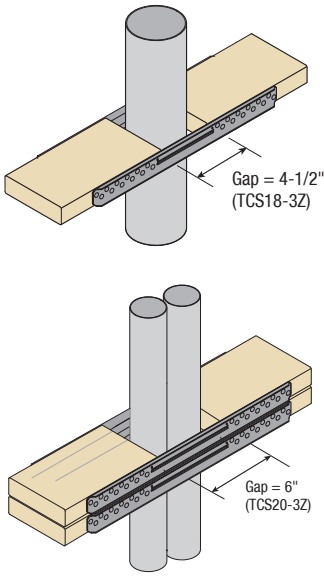

TENSION-COMPRESSION STRAPS - ALLOWABLE COMPRESSION AND TENSION VALUES

Part No.	Installed On	Number of Straps	Fasteners Per Strap		Allowable Loads (lb)[1] (C_D = 1.6)			
					SP/DF-L		HF/SPF	
			Type	Qty	Compression	Tension	Compression	Tension
TCS18-3Z	One Side	1	10d x 1-1/2" (0.148 x 1.50")	24	1,270	2,465	1,100	2,130
		2			2,330	4,930	2,015	4,265
TCS20-3Z	Two Sides	2 (total)			2,330	4,930	2,015	4,265
		3 (total)			3,600	7,390	3,115	6,395
		4 (total)			4,660	9,855	4,030	8,530

NOTES:

1. Allowable loads are provided for a load duration factor (C_D) of 1.6. No further increase is permitted.