CCS/ECCS SERIES

PRODUCT FEATURES:

Welded Column Caps (CCS) and End Column Caps (ECCS) are heavy post to beam connectors that uses QuickTie Structural Wood Screws for higher load rating.

MATERIAL:

CCS – 7 ga and 3 ga
ECCS – 7 ga and 3 ga

COATING:

Spray Painted Primer (gray)

INSTALLATION:

- Use all specified fasteners in schedule to achieve values indicated.
- EOR to design the post and beam(s) to support the required loads.

CODE COMPLIANCE:

Call QT for code approval information.

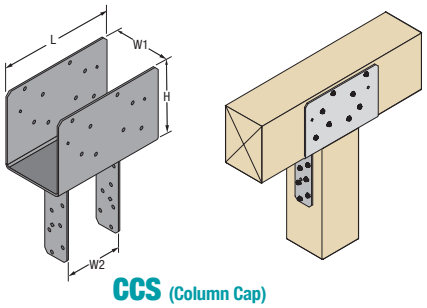

CCS (Column Cap)
(Part includes structural wood screws)

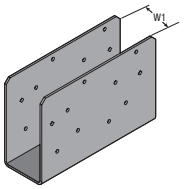

CCSO (Column Cap w/ No Straps)
(Part includes structural wood screws)

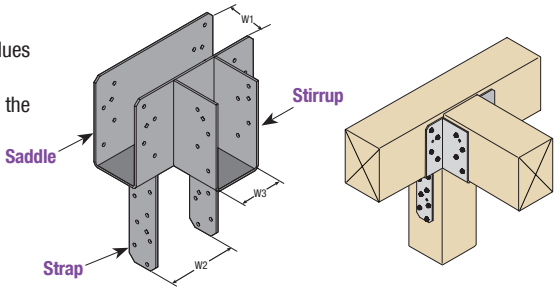

CCST (Column Cap w/ Tee Beam)
(Part includes structural wood screws)

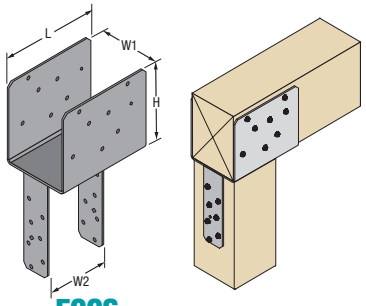

ECCS (End Column Cap)
(Part includes structural wood screws)

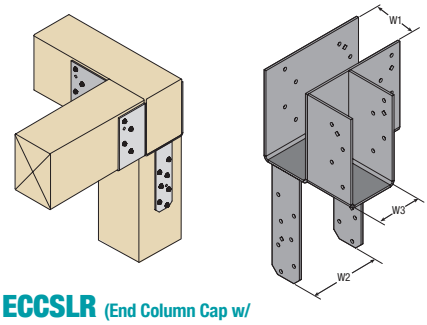

ECCSLR (End Column Cap w/ Right Leg Beam)
(Part includes structural wood screws)

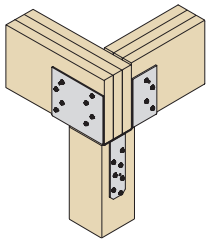

ECCSLL (End Column Cap w/ Left Leg Beam)
(Part includes structural wood screws)

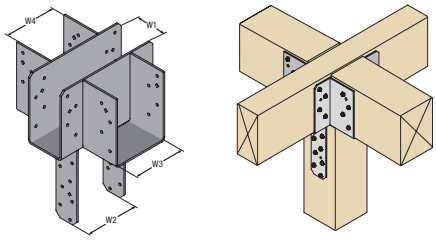

CCSC (Column Cap w/ Cross Beams)
(Part includes structural wood screws)

ALLOWABLE LOADS FOR CCS (LB)[1,2]

	Part No.	Steel Thick., ga	Dimensions (in.)				Fastener Schedule[1]				Allowable Loads (lb)*	
							Beam		Post		SP/DF-L (0.50)	
			W1	W2	H	L	Qty	Type	Qty	Type	Bearing (C_n = 1.0)[2]	Uplift (C_n = 1.6)[3]
CCS	CCS325-4	7	3-1/4	3-5/8	7	11	16	SWH3	14	SWH3	22,560	7,420
	CCS325-6	7	3-1/4	5-1/2							22,560	
	CCS44	7	3-5/8	3-5/8							25,270	
	CCS45	7	3-5/8	5-3/8							25,270	
	CCS46	7	3-5/8	5-1/2							25,270	
	CCS4-71	7	3-5/8	7-1/8							25,270	
	CCS48	7	3-5/8	7-1/2							25,270	
	CCS525-4	3	5-1/4	3-5/8	7	11	16	SWH3	14	SWH3	43,720	7,420
	CCS525-6	3	5-1/4	5-1/2							43,720	
	CCS525-8	3	5-1/4	7-1/2							43,720	
	CCS57	3.	5-3/8	7-1/8							37,900	
	CCS64	7	5-1/2	3-5/8	7	11	16	SWH3	14	SWH3	39,705	7,420
	CCS66	7	5-1/2	5-1/2							39,705	
	CCS6-71	7	5-1/2	7-1/8							39,705	
	CCS68	7	5-1/2	7-1/2							39,705	
	CCS74	3	6-7/8	3-5/8	7	11	16	SWH3	14	SWH3	48,725	7,420
	CCS76	3	6-7/8	5-1/2							48,725	
	CCS77	3	6-7/8	7-1/8							48,725	
	CCS78	3	6-7/8	7-1/2							48,725	
	CCS71-4	3	7-1/4	3-5/8							50,530	
	CCS71-6	3	7-1/4	5-1/2							50,530	
	CCS71-71	3	7-1/4	7-1/4							50,530	
	CCS71-8	3	7-1/4	7-1/2							50,530	
	CCS84	3	7-1/2	3-5/8	7	11	16	SWH3	14	SWH3	54,145	7,420
	CCS86	3	7-1/2	5-1/2							54,145	
	CCS88	3	7-1/2	7-1/2							54,145	
	CCS94	3	8-7/8	3-5/8							63,165	
	CCS96	3	8-7/8	5-1/2							63,165	
	CCS98	3	8-7/8	7-1/2							63,165	
	CCS106	3	9-1/2	5-1/2							68,580	

NOTES:

1. Refer to page 71 for structural wood screw SWH3 (1/4" x 3") details.
2. Allowable uplift loads are provided for load duration factor (C_D) of 1.6. No further increase is permitted.

*Allowable loads per NDS calculations, call QT for code approval information.