PCM & EPCM SERIES

PRODUCT FEATURES:

PCM and EPCM are post caps and end post caps used for post-to-beam connection applications.

MATERIAL:

PCM/EPCM - 16 ga and 12 ga

COATING:

Galvanized (G185)

INSTALLATION:

- Use all specified fasteners in schedule to achieve values indicated.
- EOR's approval is required to substitute 16 ga post caps and end post caps for 12 ga post caps and end post caps.

CODE COMPLIANCE:

TER 0910-01; FL 3557

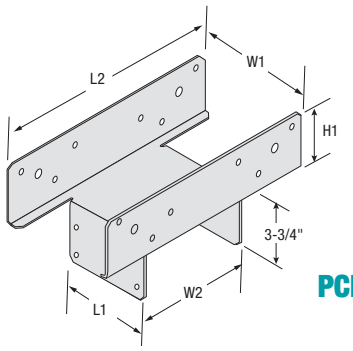

PCM

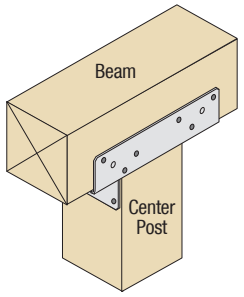

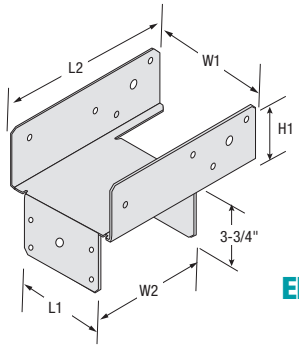

EPCM

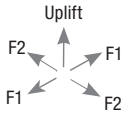

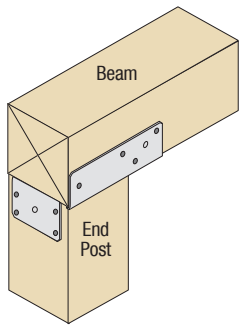

ALLOWABLE LOADS FOR PCM & EPCM (LB)[1,2]

Part Name	Part No.	Dimensions (in.)					Fasteners[1]				Allowable Loads (lb)[2]					
							Beam		Post		Southern Pine (SG=0.55)			Douglas Fir - Larch (SG=0.50)		
		W1	W2	H1	L1	L2	Qty	Size	Qty	Size	Uplift	F1	F2	Uplift	F1	F2
12ga PCM	PCM44	3-9/16	3-9/16	3-9/16	2-7/16	11	12	16d	8	16d	2,120	2,050	1,955	2,085	1,855	1,795
	PCM46		5-9/16			13										
	PCM48		7-9/16			15										
	PCM64	5-1/2	3-9/16	3-1/2	3-13/16	11										
	PCM66		5-9/16			13										
	PCM68		7-9/16			15										
	PCM77	7-1/8	7-1/8	3-11/16	5-5/8	14-9/16										
	PCM84	7-1/2	3-9/16	3-1/2	5-5/8	11										
	PCM86		5-9/16	3-3/8		13										
	PCM88		7-9/16	3-1/2		14-5/8										
16ga PCM	PCM44-16	3-9/16	3-9/16	3-9/16	2-7/16	11	12	16d	8	16d	1,875	1,875	1,730	1,845	1,640	1,590
	PCM46-16		5-9/16			13										
	PCM48-16		7-9/16			15										
	PCM64-16	5-1/2	3-9/16	3-1/2	3-13/16	11										
	PCM66-16		5-9/16			13										
	PCM68-16		7-9/16			15										
	PCM84-16	7-1/2	3-9/16	3-1/2	5-5/8	11										
	PCM86-16		5-9/16	3-3/8	5-1/8	13										
	PCM88-16		7-9/16	3-1/2		15										
12ga EPCM	EPCM44	3-9/16	3-9/16	3-9/16	2-7/16	7-1/4	8	16d	8	16d	2,120	2,050	1,955	2,085	1,855	1,795
	EPCM46		5-9/16			9-1/4										
	EPCM48		7-9/16			11-1/4										
	EPCM64	5-1/2	3-9/16	3-1/2	3-13/16	7-1/4										
	EPCM66		5-9/16			9-1/4										
	EPCM68		7-9/16			11-1/4										
	EPCM77	7-1/8	7-1/8	3-11/16	5-5/8	10-13/16										
	EPCM84	7-1/2	3-9/16	3-1/2	5-5/8	7-1/4										
	EPCM86		5-9/16	3-1/2		9-1/4										
	EPCM88		7-9/16	3-1/2		11-1/8										
16ga EPCM	EPCM44-16	3-9/16	3-9/16	3-9/16	2-7/16	7-1/4	8	16d	8	16d	1,875	1,815	1,730	1,845	1,640	1,590
	EPCM46-16		5-9/16			9-1/4										
	EPCM48-16		7-9/16			11-1/4										
	EPCM64-16	5-1/2	3-9/16	3-1/2	3-13/16	7-1/4										
	EPCM66-16		5-9/16			9-1/4										
	EPCM68-16		7-9/16			11-1/4										
	EPCM84-16	7-1/2	3-9/16	3-1/2	5-5/8	7-1/4										
	EPCM86-16		5-9/16	3-1/2		9-1/4										
	EPCM88-16		7-9/16	3-1/2		11-1/4										

NOTES:

1. Nails designated as 16d shall be 16d common nails (0.162 x 3.5", F_{yb} = 90,000 psi).
2. Allowable loads are provided for load duration factor (C_D) of 1.6. No further increase is permitted