ALLOWABLE TENSION LOADS FOR CMST16-54, CMST14-52.5, CMST14-12, CMST12-40 & CMST84 COIL STRAPS (LB)[1,2]

	Fasteners		Minimum Required End Length (in.)	Southern Pine (SG = 0.55)		Douglas Fir - Larch (SG = 0.50)		Spruce - Pine - Fir (SG = 0.42)	
				Load Duration Factor					
	Size	No. Each End of Strap		1.0	1.60	1.0	1.60	1.0	1.60
CMST16-54	16d Common (0.162 x 3.5")	6	4-1/2	933	1,493	861	1,378	743	1,189
		12	9	1,866	2,985	1,723	2,757	1,486	2,378
		18	13-1/2	2,799	4,478	2,584	4,135	2,229	3,567
		24	18	3,732	5,295	3,446	5,295	2,972	4,755
		30	22-1/2	4,665	5,295	4,307	5,295	3,715	5,295
		36	27	5,295	5,295	5,169	5,295	4,458	5,295
		42	31-1/2	5,295	5,295	5,295	5,295	5,201	5,295
		48	36	5,295	5,295	5,295	5,295	5,295	5,295
CMST14-52.5 & CMST14-12	10d Common (0.148 x 3")	6	4-1/2	818	1,308	756	1,210	654	1,046
		12	9	1,635	2,616	1,512	2,419	1,307	2,092
		18	13-1/2	2,453	3,925	2,268	3,629	1,961	3,138
		24	18	3,270	5,233	3,024	4,839	2,615	4,184
		30	22-1/2	4,088	6,524	3,780	6,049	3,269	5,230
		36	27	4,906	6,524	4,536	6,524	3,922	6,276
		42	31-1/2	5,723	6,524	5,293	6,524	4,567	6,524
		48	36	6,524	6,524	6,049	6,524	5,230	6,524
		54	40-1/2	6,524	6,524	6,524	6,524	5,884	6,524
		60	45	6,524	6,524	6,524	6,524	6,524	6,524
	16d Common (0.162 x 3.5")	6	4-1/2	962	1,540	889	1,425	768	1,229
		12	9	1,924	3,079	1,779	2,846	1,537	2,459
		18	13-1/2	2,887	4,619	2,668	4,269	2,305	3,688
		24	18	3,849	6,158	3,558	5,692	3,074	4,918
		30	22-1/2	4,811	6,524	4,447	6,524	3,842	6,147
		36	27	5,775	6,524	5,336	6,524	4,611	6,524
		42	31-1/2	6,524	6,524	6,226	6,524	5,379	6,524
		48	36	6,524	6,524	6,524	6,524	6,147	6,524
		54	40-1/2	6,524	6,524	6,524	6,524	6,524	6,524
CMST12-40 & CMSTC84	10d Common (0.148 x 3")	6	4-1/2	906	1,449	839	1,342	727	1,164
		12	9	1,811	2,898	1,678	2,684	1,455	2,328
		18	13-1/2	2,717	4,347	2,517	4,027	2,182	3,492
		24	18	3,622	5,795	3,356	5,369	2,910	4,656
		30	22-1/2	4,528	7,244	4,194	6,711	3,637	5,820
		36	27	5,433	8,693	5,033	8,053	4,365	6,984
		42	31-1/2	6,339	9,256	5,872	9,256	5,092	8,148
		48	36	7,244	9,256	6,711	9,256	5,820	9,256
		54	40-1/2	8,150	9,256	7,550	9,256	6,547	9,256
		60	45	9,055	9,256	8,390	9,256	7,275	9,256
		66	49-1/2	9,256	9,256	9,228	9,256	8,002	9,256
		72	54	9,256	9,256	9,256	9,256	8,730	9,256
		78	58-1/2	9,256	9,256	9,256	9,256	9,256	9,256
	16d Common (0.162 x 3.5")	6	4-1/2	1,051	1,681	973	1,557	843	1,349
		12	9	2,102	3,363	1,946	3,114	1,687	2,698
		18	13-1/2	3,153	5,044	2,919	4,671	2,530	4,048
		24	18	4,204	6,726	3,892	6,228	3,373	5,397
		30	22-1/2	5,254	8,407	4,866	7,785	4,216	6,746
		36	27	6,305	9,256	5,839	9,256	5,060	8,095
		42	31-1/2	7,356	9,256	6,812	9,256	5,903	9,256
		48	36	8,407	9,256	7,785	9,256	6,746	9,256
		54	40-1/2	9,256	9,256	8,758	9,256	7,589	9,256
		60	45	9,256	9,256	9,256	9,256	8,433	9,256
		66	49-1/2	9,256	9,256	9,256	9,256	9,256	9,256

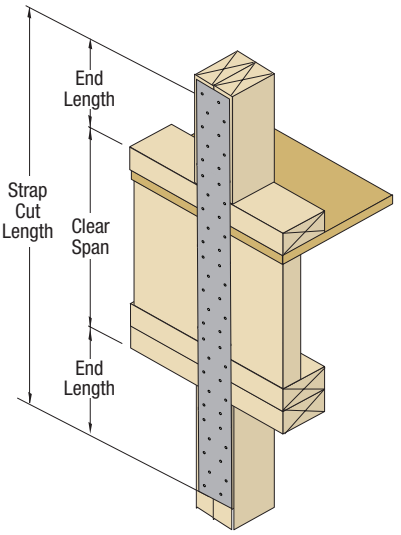

CMST

NOTES:

1. Allowable tension loads apply for uplift when the straps are installed vertically.
2. The total strap cut length is equal to the Clear Span + 2 x End Length.