ALLOWABLE TENSION LOADS FOR CS18-200, CS16-150, CS14-100 & CMST16-54 COIL STRAPS (LB)[1,2]

	Fasteners		Minimum Required End Length (in.)	Southern Pine (SG = 0.55)		Douglas Fir - Larch (SG = 0.50)		Spruce - Pine - Fir (SG = 0.42)	
				Load Duration Factor					
	Size	No. Each End of Strap		1.0	1.60	1.0	1.60	1.0	1.60
CS18-200	10d x 1-1/2 (0.148 x 1.5") & 10d Common (0.148 x 3")	4	3	512	820	473	757	408	652
		6	4-1/2	769	1,230	709	1,135	611	978
		8	6	1,025	1,640	946	1,513	815	1,304
		10	7-1/2	1,281	1,777	1,182	1,777	1,019	1,630
		11	8-1/4	1,409	1,777	1,300	1,777	1,121	1,777
		12	9	1,537	1,777	1,419	1,777	1,223	1,777
		13	9-3/4	1,665	1,777	1,537	1,777	1,324	1,777
		14	10-1/2	1,777	1,777	1,655	1,777	1,426	1,777
		15	11-1/4	1,777	1,777	1,773	1,777	1,528	1,777
		16	12	1,777	1,777	1,777	1,777	1,630	1,777
		17	12-3/4	1,777	1,777	1,777	1,777	1,732	1,777
		18	13-1/2	1,777	1,777	1,777	1,777	1,777	1,777
CS16-150	8d x 1-1/2 (0.131 x 1.5") & 8d Common (0.131 x 2.5")	4	3	438	701	405	648	350	560
		6	4-1/2	658	1,052	608	972	525	840
		8	6	877	1,403	810	1,296	700	1,120
		10	7-1/2	1,096	1,754	1,013	1,621	875	1,400
		12	9	1,315	2,104	1,215	1,945	1,050	1,679
		14	10-1/2	1,534	2,206	1,418	2,026	1,225	1,959
		16	12	1,754	2,206	1,621	2,206	1,400	2,206
		18	13-1/2	1,973	2,206	1,823	2,206	1,575	2,206
		20	15	2,192	2,206	2,026	2,206	1,749	2,206
		21	15-3/4	2,206	2,206	2,127	2,206	1,837	2,206
		22	16-1/2	2,206	2,206	2,206	2,206	1,924	2,206
		24	18	2,206	2,206	2,206	2,206	2,099	2,206
		26	19-1/2	2,206	2,206	2,206	2,206	2,206	2,206
	10d x 11/2 (0.148 x 1.5") & 10d Common (0.148 x 3")	4	3	525	840	485	776	419	670
		6	4-1/2	788	1,261	728	1,164	628	1,005
		8	6	1,050	1,681	970	1,553	838	1,340
		10	7-1/2	1,313	2,101	1,213	1,941	1,047	1,675
		12	9	1,576	2,206	1,456	2,206	1,256	2,010
		14	10-1/2	1,838	2,206	1,698	2,206	1,466	2,206
		16	12	2,101	2,206	1,941	2,206	1,675	2,206
		18	13-1/2	2,206	2,206	2,183	2,206	1,885	2,206
		20	15	2,206	2,206	2,206	2,206	2,094	2,206
		22	16-1/2	2,206	2,206	2,206	2,206	2,206	2,206
CS14-100	8d x 1-1/2 (0.131 x 1.5") & 8d Common (0.131 x 2.5")	4	3	457	732	423	677	366	586
		6	4-1/2	686	1,098	635	1,015	549	878
		8	6	915	1,464	846	1,354	732	1,171
		10	7-1/2	1,143	1,829	1,058	1,692	915	1,464
		12	9	1,372	2,195	1,269	2,031	1,098	1,757
		14	10-1/2	1,601	2,561	1,481	2,369	1,281	2,050
		16	12	1,829	2,718	1,692	2,708	1,464	2,343
		18	13-1/2	2,058	2,718	1,904	2,718	1,647	2,635
		20	15	2,287	2,718	2,115	2,718	1,830	2,718
		22	16-1/2	2,515	2,718	2,327	2,718	2,013	2,718
		24	18	2,718	2,718	2,539	2,718	2,196	2,718
		25	18-3/4	2,718	2,718	2,644	2,718	2,288	2,718
		26	19-1/2	2,718	2,718	2,718	2,718	2,379	2,718
		27	20-1/4	2,718	2,718	2,718	2,718	2,471	2,718
		28	21	2,718	2,718	2,718	2,718	2,562	2,718
		29	21-3/4	2,718	2,718	2,718	2,718	2,654	2,718
		30	22-1/2	2,718	2,718	2,718	2,718	2,718	2,718
	10d x 1-1/2 (0.148 x 1.5") & 10d Common	4	3	545	872	504	806	436	697
		6	4-1/2	818	1,308	756	1,210	654	1,046
		8	6	1,090	1,744	1,008	1,613	872	1,395
		10	7-1/2	1,363	2,180	1,260	2,016	1,090	1,743
		12	9	1,635	2,616	1,512	2,419	1,307	2,092
		14	10-1/2	1,908	2,718	1,764	2,718	1,525	2,441
		16	12	2,180	2,718	2,016	2,718	1,743	2,718
		18	13-1/2	2,453	2,718	2,268	2,718	1,961	2,718
		20	15	2,718	2,718	2,520	2,718	2,179	2,718
		21	15-1/2	2,718	2,718	2,646	2,718	2,288	2,718
		22	16-1/2	2,718	2,718	2,718	2,718	2,397	2,718
		23	17-1/4	2,718	2,718	2,718	2,718	2,506	2,718
		24	18	2,718	2,718	2,718	2,718	2,615	2,718
		25	18-3/4	2,718	2,718	2,718	2,718	2,718	2,718
CMST16-54	10d Common (0.148 x 3")	6	4-1/2	788	1,261	728	1,164	628	1,005
		12	9	1,576	2,521	1,456	2,329	1,256	2,010
		18	13-1/2	2,364	3,782	2,183	3,493	1,885	3,015
		24	18	3,151	5,042	2,911	4,658	2,513	4,021
		30	22-1/2	3,939	5,295	3,639	5,295	3,141	5,026
		36	27	4,727	5,295	4,367	5,295	3,769	5,295
		42	31-1/2	5,295	5,295	5,095	5,295	4,397	5,295
		48	36	5,295	5,295	5,295	5,295	5,026	5,295
		54	40-1/2	5,295	5,295	5,295	5,295	5,295	5,295

Continued on next page.

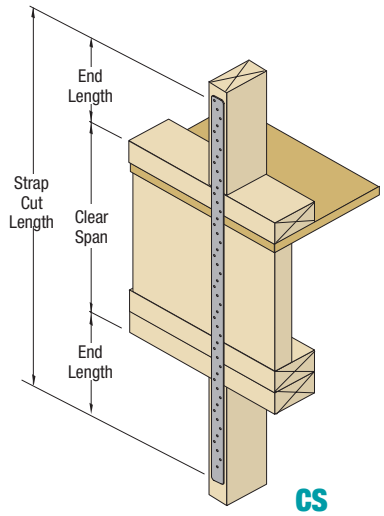

CS

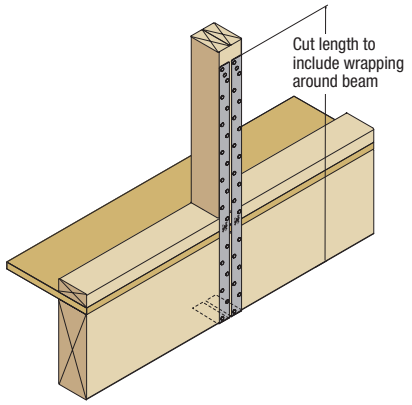

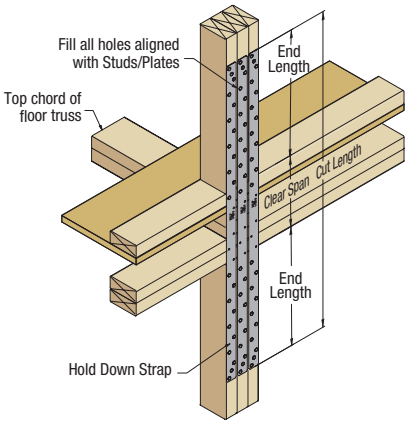

NOTES:

1. Allowable tension loads apply for uplift when the straps are installed vertically.
2. The total strap cut length is equal to the Clear Span + 2 x End Length.