CS & CMST SERIES

PRODUCT FEATURES:

Coil strap has pre-drilled nail holes, which allows the installer to cut to any length as required for a wide range of wood connections.

MATERIAL:

CS Series (1-1/4" width):
- CS20-250 - 20 ga, 250 ft
- CS18-200 - 18 ga, 200 ft
- CS16-150 - 16 ga, 150 ft
- CS14-100 - 14 ga, 100 ft

CMST Series (3" width):
- CMST16-54 - 16 ga, 54 ft
- CMST14-52.5 - 14 ga, 52-1/2 ft
- CMST14-12 - 14 ga, 12 ft
- CMST12-40 - 12 ga, 40 ft
- CMSTC84 - 12 ga, 7 ft

COATING:

Galvanized (G185)

INSTALLATION:

- Use all specified fasteners in schedule to achieve values indicated.

CODE COMPLIANCE:

TER 0910-01; FL 3557

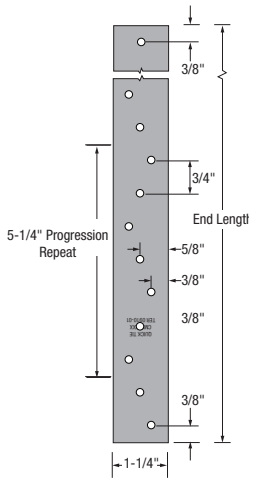

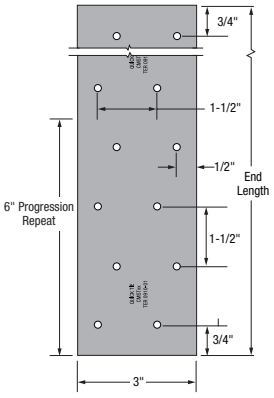



CS

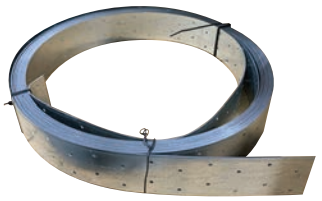

CMST

ALLOWABLE TENSION LOADS FOR CS20-250 STRAP (LB)[1,2]

	Fasteners		Minimum Required End Length (in.)	Southern Pine (SG = 0.55)		Douglas Fir - Larch (SG = 0.50)		Spruce - Pine - Fir (SG = 0.42)	
				Load Duration Factor					
	Size	No. Each End of Strap		1.0	1.60	1.0	1.60	1.0	1.60
CS20-250	8d x 1-1/2 (0.131 x 1.5") & 8d Common (0.131 x 2.5")	4	3	417	668	385	615	331	530
		6	4½	626	1,001	577	923	497	794
		8	6	834	1,335	769	1,231	662	1,059
		10	7½	1,043	1,343	962	1,343	828	1,324
		11	8¼	1,147	1,343	1,058	1,343	910	1,343
		12	9	1,252	1,343	1,154	1,343	993	1,343
		13	93/4	1,343	1,343	1,250	1,343	1,076	1,343
		14	10½	1,343	1,343	1,343	1,343	1,159	1,343
		15	11¼	1,343	1,343	1,343	1,343	1,241	1,343
		16	12	1,343	1,343	1,343	1,343	1,324	1,343
		17	12¾	1,343	1,343	1,343	1,343	1,343	1,343
	10d x 1-1/2 (0.148 x 1.5") & 10d Common (0.148 x 3")	4	3	504	806	464	743	399	639
		6	4½	755	1,209	696	870	599	958
		8	6	1,007	1,343	928	1,114	799	1,278
		9	6¾	1,133	1,343	1,044	1,343	898	1,343
		10	7½	1,259	1,343	1,160	1,343	998	1,343
		11	8¼	1,343	1,343	1,277	1,343	1,098	1,343
		12	9	1,343	1,343	1,343	1,343	1,198	1,343
		13	9¾	1,343	1,343	1,343	1,343	1,298	1,343
		14	10½	1,343	1,343	1,343	1,343	1,343	1,343
CS18-200	8d x 1-1/2 (0.131 x 1.5") & 8d Common (0.131 x 2.5")	4	3	426	682	393	629	339	543
		6	4-1/2	639	1,022	590	944	509	814
		8	6	852	1,363	787	1,258	678	1,085
		10	7-1/2	1,065	1,704	983	1,573	848	1,356
		12	9	1,278	1,777	1,180	1,777	1,017	1,628
		14	10-1/2	1,491	1,777	1,376	1,777	1,187	1,777
		16	12	1,704	1,777	1,573	1,777	1,356	1,777
		17	12-3/4	1,777	1,777	1,671	1,777	1,441	1,777
		18	13-1/2	1,777	1,777	1,770	1,777	1,526	1,777
		19	14-1/4	1,777	1,777	1,777	1,777	1,611	1,777
		20	15	1,777	1,777	1,777	1,777	1,695	1,777
		21	15-3/4	1,777	1,777	1,777	1,777	1,777	1,777

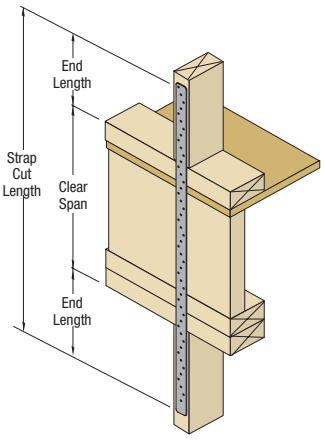

Continued on next page.

NOTES:

1. Allowable tension loads apply for uplift when the straps are installed vertically.
2. The total strap cut length is equal to the Clear Span + 2 x End Length.