LS & MS SERIES

PRODUCT FEATURES:

The Light Strap (LS) and Medium Strap (MS) are used to resist wind uplift and are manufactured in lengths varying from 9-5/8" to 48-5/8". Each strap is 1-1/4" wide with nail holes punched at intervals of 1-1/2" along its length. The nail holes are staggered across the width of the strap to prevent wood splitting.

MATERIAL:

LS Series - 20 ga
MS Series - 16 ga

COATING:

Galvanized (G185)

INSTALLATION:

- Use all specified fasteners in schedule to achieve values indicated.
- May be installed on each side of member for twice the loads when the member thickness is greater than 2-1/2".

CODE COMPLIANCE:

TER 0910-01; FL 3557



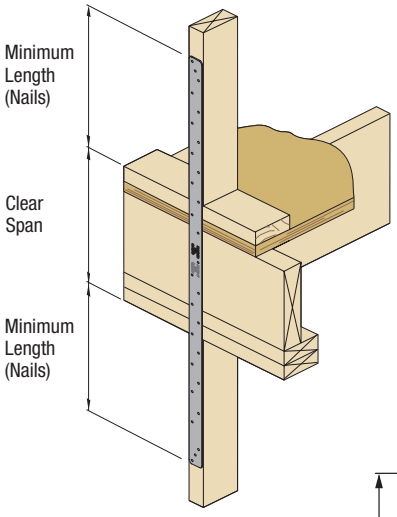

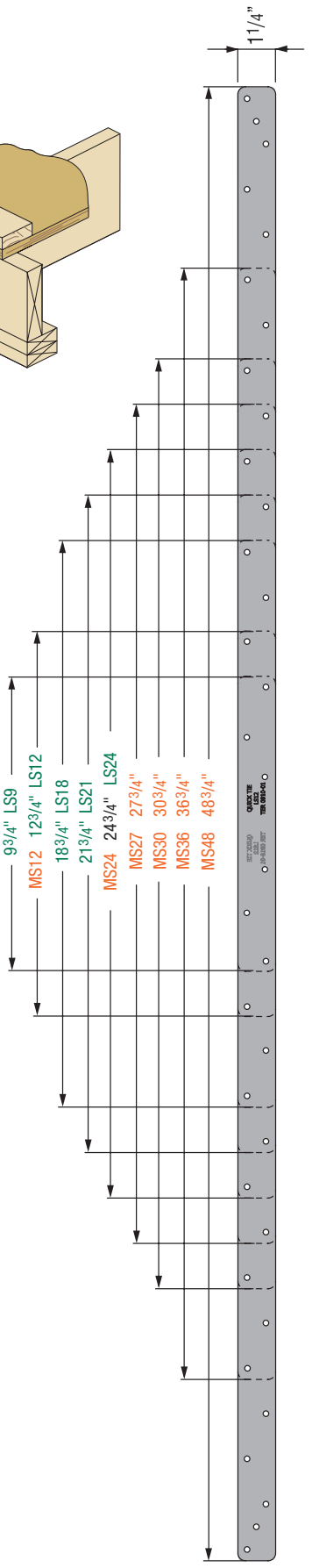

ALLOWABLE TENSION LOADS FOR LS & MS SERIES STRAPS (LB)[1,2]

	Part No.	Fasteners		Southern Pine (SG=0.55)		Douglas Fir - Larch (SG=0.50)		Spruce - Pine - Fir (SG=0.42)	
		Size	No. of Nails Each End of Strap	Load Duration Factor[2]					
				1.00	1.60	1.00	1.60	1.00	1.60
LS	LS9	8d (0.131 x 2.5")	4	415	665	385	615	330	525
	LS12		5	520	830	480	770	410	655
	LS18		7	730	1,165	670	1,075	575	920
	LS21		8	830	1,295	770	1,229	655	1,050
	LS24		9	935	1,295	865	1,295	740	1,180
	LS9	10d x 1½ (0.148 x 1.5")	4	500	800	460	735	390	625
	LS12		5	625	1,000	575	920	490	785
	LS18		7	875	1,295	805	1,290	685	1,100
	LS21		8	1,000	1,295	920	1,295	785	1,255
	LS24		9	1,125	1,295	1,035	1,295	880	1,295
	LS9	10d (0.148 x 3")	4	505	805	465	740	395	635
	LS12		5	630	1,010	580	930	495	790
	LS18		7	880	1,295	810	1,295	695	1,110
	LS21		8	1,010	1,295	930	1,295	790	1,265
	LS24		9	1,135	1,295	1,045	1,295	890	1,295
MS	MS12*	8d (0.131 x 2.5")	5	545	870	505	805	435	695
	MS24		9	980	1,570	910	1,455	785	1,255
	MS27		10	1,090	1,745	1,010	1,615	870	1,390
	MS30		11	1,200	1,920	1,110	1,780	955	1,530
	MS36		13	1,415	2,120	1,315	2,100	1,130	1,810
	MS48		14	1,525	2,120	1,415	2,120	1,220	1,950
	MS12*	10d x 1½ (0.148 x 1.5")	5	600	960	600	960	525	840
	MS24		9	1,150	1,845	1,060	1,700	910	1,455
	MS27		10	1,280	2,050	1,180	1,890	1,010	1,615
	MS30		11	1,410	2,120	1,300	2,075	1,110	1,780
	MS36		13	1,665	2,120	1,535	2,120	1,315	2,100
	MS48		14	1,790	2,120	1,650	2,120	1,415	2,120
	MS12*	10d (0.148 x 3")	5	600	960	600	960	525	840
	MS24		9	1,180	1,885	1,090	1,740	935	1,500
	MS27		10	1,310	2,095	1,210	1,935	1,040	1,665
	MS30		11	1,440	2,120	1,330	2,120	1,145	1,830
	MS36		13	1,705	2,120	1,575	2,120	1,350	2,120
	MS48		14	1,835	2,120	1,695	2,120	1,455	2,120

NOTES:

1. Allowable tension loads apply for uplift when the straps are installed vertically.
2. Allowable tension loads for load durations of two months (i.e., 115%) and seven days (i.e., 125%) may be obtained by multiplying the corresponding allowable tension load in the load duration factor column marked "1.0" by 1.15 or 1.25 respectively, with a maximum of 1,295 lb (LS Series) and 2,118 lb (MS Series).

*Call QT for code approval information.