## SC34, SC35 & SC35F

**PRODUCT FEATURES:**

Shear Clips (SC34 & SC35) and Flat Shear Clips (SC35F) are multi-purpose framing angles and flat connectors for connecting studs, plates, headers, joists, etc.

**MATERIAL:**

SC34, SC35 & SC35F - 18 ga

**COATING:**

Galvanized (G185)

**INSTALLATION:**

- Use all specified fasteners in schedule to achieve values indicated.

**CODE COMPLIANCE:**

TER 0910-01; FL 3557

| Part No. | Carton Qty |
|---|---|
| SC34 | 100 |
| SC35 | 100 |
| SC35F | 200 |

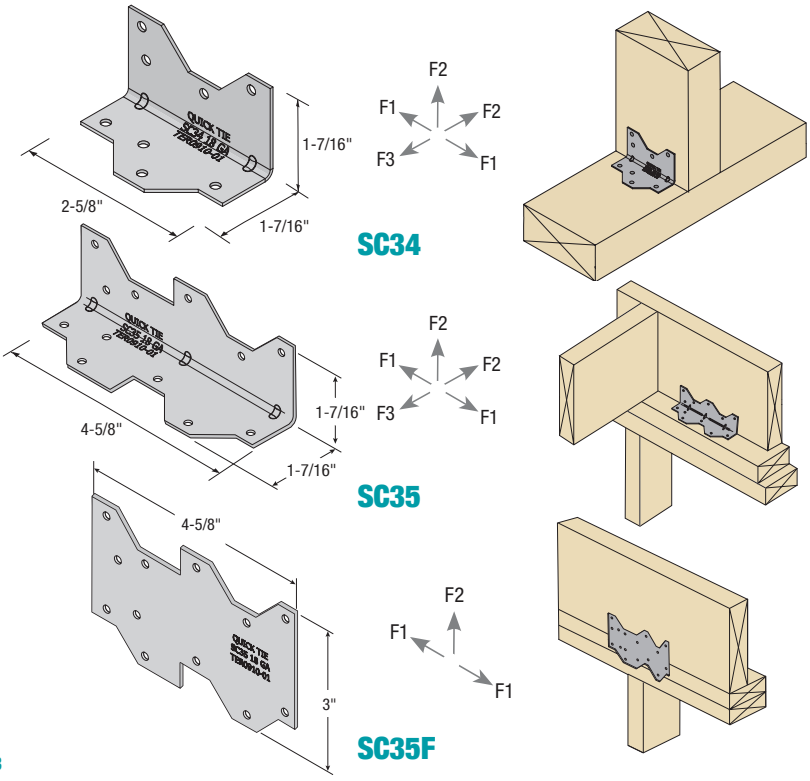


## ALLOWABLE LOADS FOR SC34, SC35 & SC35F[1,2,3]

| Part No. | Species | Fasteners | | Allowable Loads (lb) | | | | | |
|---|---|---|---|---|---|---|---|---|---|
| | | | | F1 | | F2 | | F3 | |
| | | Size | Total | 1.00 | 1.60 | 1.00 | 1.60 | 1.00 | 1.60 |
| SC34 | Southern Pine | 8d x 1-1/2" | 8 | 425 | 685 | 425 | 685 | 215 | 325 |
| | Douglas Fir-Larch | 8d x 1-1/2" | 8 | 395 | 630 | 395 | 630 | 170 | 255 |
| | Spruce-Pine-Fir | 8d x 1-1/2" | 8 | 340 | 545 | 340 | 540 | 110 | 175 |
| SC35 | Southern Pine | 10d x 1-1/2" | 12 | 755 | 840 | 295 | 295 | 755 | 1,075 |
| | | 10d x 3" | 12 | 770 | 940 | 260 | 260 | 770 | 1,015 |
| | Douglas Fir-Larch | 10d x 1-1/2" | 12 | 695 | 765 | 265 | 265 | 695 | 975 |
| | | 10d x 3" | 12 | 710 | 840 | 235 | 235 | 710 | 905 |
| | Spruce- Pine-Fir | 10d x 1-1/2" | 12 | 595 | 650 | 200 | 230 | 595 | 830 |
| | | 10d x 3" | 12 | 605 | 720 | 200 | 200 | 605 | 775 |
| SC35F | Southern Pine | 10d x 1-1/2" | 12 | 755 | 775 | 500 | 500 | - | - |
| | | 10d x 3" | 12 | 735 | 735 | 550 | 550 | - | - |
| | Douglas Fir-Larch | 10d x 1-1/2" | 12 | 655 | 655 | 430 | 430 | - | - |
| | | 10d x 3" | 12 | 615 | 615 | 470 | 470 | - | - |
| | Spruce- Pine-Fir | 10d x 1-1/2" | 12 | 560 | 560 | 370 | 370 | - | - |
| | | 10d x 3" | 12 | 525 | 525 | 400 | 400 | - | - |

**NOTES:**

1. The tabulated loads are per framing angle and flat connector.
2. SC34 and SC35 - Connectors are required on both sides of the joist/stud to achieve the F3 loads in both directions.
3. SC34 and SC35 - When installed directly across from each other on both sides of the joist/stud, the thickness of the joist/stud should be twice the length of the fastener.

## PC SERIES

**PRODUCT FEATURES:**

Plywood clips are used to support sheathing edges between rafters/ trusses.

**MATERIAL:** 20 ga

**COATING:**

Galvanized

**INSTALLATION:**

- Install same size clip as panel thickness centered between rafter/ truss.

| Part No. | Description | Carton Qty |
|---|---|---|
| PC38 | 3/8" Panel Thickness | 250 |
| PC716 | 7/16" Panel Thickness | 250 |
| PC1532 | 15/32" Panel Thickness | 250 |
| PC12 | 1/2" Panel Thickness | 250 |
| PC1932 | 19/32" Panel Thickness | 250 |
| PC58 | 5/8" Panel Thickness | 250 |
| PC34 | 3/4" Panel Thickness | 250 |

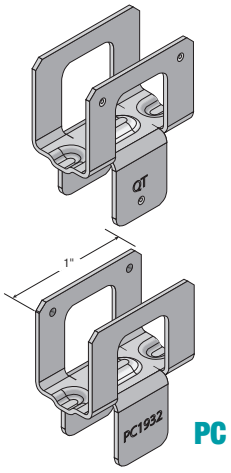


PC

