Hurricane Gusset Angles

HGA & HGAM

PRODUCT FEATURES:

Hurricane Gusset Angles (HGA/HGAM) are 90-degree framing angles used to connect truss/rafter joists to the top plate of wood framing walls or to the top of concrete filled CMU walls.

The HGAKT and HGAMKT includes HGA framing angle and wood screws for wood framing applications and HGA framing angle, wood screws and concrete screws for concrete/CMU applications, respectively.

MATERIAL:
HGA - 14 ga

COATING:
Galvanized (G185)

INSTALLATION:
- Use all specified fasteners in schedule to achieve values indicated.

CODE COMPLIANCE:
TER 0910-01; FL 3557

Part No.	Description	Carton Qty
HGAKT	HGA, 1/4" x 1-1/2" Wood Screws & 1/4 x 3" Wood Screws	10
HGAMKT	HGA, 1/4" x 1-1/2" Wood Screws & 1/4 x 2-1/4" Concrete Screws	10

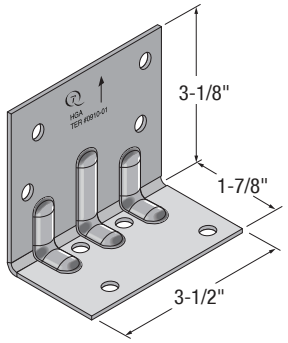

HGA/HGAM

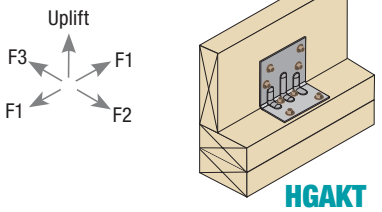

HGAKT
(Part includes structural wood screws)

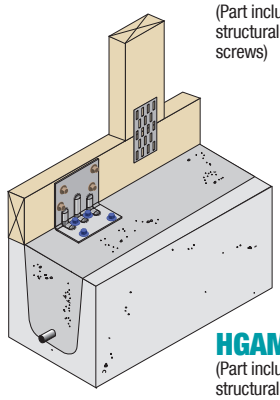

HGAMKT
(Part includes structural wood screws and concrete screws)

ALLOWABLE LOADS FOR HGA & HGAM (LB)

Part No.	Fasteners[4,5,6]				Allowable Loads (lb)[1,2,3]							
	To Rafter/Truss		To Top Plate or Concrete		Douglas Fir-Larch (0.50)				Spruce-Pine-Fir (0.42)			
					Uplift	F1	F2	F3	Uplift	F1	F2	F3
	Type	Quantity	Type	Quantity	1.6	1.6	1.6	1.6	1.6	1.6	1.6	1.6
HGA	SWH15 Wood Screw (1/4" x 1-1/2")	4	SWH3 Wood Screw (1/4" x 3")	4	1,085	1,085	895	1,150	740	695	420	825
HGAM	SWH15 Wood Screw (1/4" x 1-1/2")	4	Concrete Screw (1/4" x 2-1/4")	4	815	1,005	955	1,005	815	805	505	825

NOTES:
1. Loading in the F1 direction indicates shear forces parallel to the plane of the wall.
2. Loading in the F2 direction indicates shear forces perpendicular to the plane of the wall, acting towards the gusset angle.
3. Loading in the F3 direction indicates shear forces perpendicular to the plane of the wall, acting away from the gusset angle.
4. Minimum fastener penetration must be equal to the screw length less the thickness of the metal side plate.
5. Refer to page 71 for structural wood screw SWH15 (1/4" x 1-1/2") and SWH3 (1/4" x 3") details.
6. Concrete Screw: Minimum Allowable Tension (T) and Shear (S) Capacities When Installed in Concrete, T = 204 lb and S = 219 lb, Min. Edge Distance = 2", Min. Spacing = 1", Min End Distance = 2.65", Min. Embedment = 1½", Min. Concrete Compression Strength, f'_c = 2,500 psi, Load combination 1.2D+1.6L with D = 0.3, L = 0.7 and α = 1.48.

HDTT (DECK TENSION TIE)

PRODUCT FEATURES:

HDTT's are deck tension ties designed to satisfy the minimum requirements for deck construction per IRC 507. The part includes bend washer and wood screws.

MATERIAL:
HDTT – 14 ga

COATING:
Galvanized (G185)

INSTALLATION:
- Use all specified fasteners in schedule to achieve values indicated.

CODE COMPLIANCE:
TER 0910-01; FL 3557

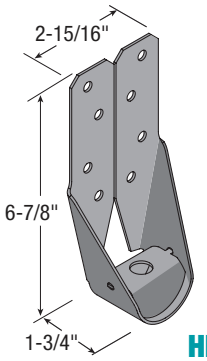

HDTT
(Part includes bend washer and structural wood screws)

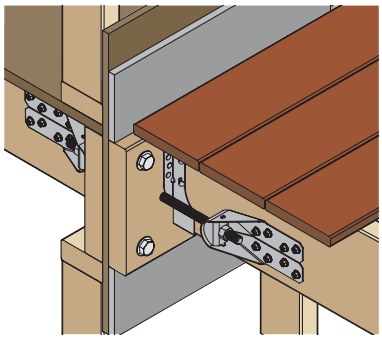

ALLOWABLE LOADS FOR DECK TENSION TIE (LB)[1,2,3]

Part No.	Steel Gauge	Dimensions (in.)						Fasteners				Tension (lb)			
		Height	Width	Depth	Stud to Anchor CL (in.)	Bottom Plate to Top of Washer (in.)	Min. Wood Member Size (in.)	Nails/Screws/Bolts		Anchor Bolt[2]		SP / DF-L (SG = 0.50)		S-P-F (SG = 0.42)	
		H	W	D				Type	Qty	Size	Qty	C_D = 1.6	Δ(1.6)	C_D = 1.6	Δ(1.6)
HDTT	14 ga	6-7/8	3-1/4	1-3/4	1	1-3/16	1-1/2 x 3-1/2	SWH15	8	1/2	1	2,430	0.347	2,105	-

NOTES:
1. Anchor bolt installation into any substrates should be designed to resist the allowable uplift loads.
2. Allowable loads based on connector attached to 2x4 from 1" above the base (i.e. no resistance from prying action).
3. Refer to page 71 for structural wood screw SWH15 (1/4"x1-1/2") details.