Typical Masonry Installation

PRODUCT FEATURES:
The QuickTie™ Masonry System is a post-tension masonry wall anchoring system consisting of PVC-coated wire rope with threaded studs swaged to each end. The bottom threaded stud of the wire rope is fed through a pre-drilled hole at the double top plate, and then coupled to an embedded anchor bolt, or, epoxied into cured concrete to anchor it to the foundation. Once secured to the foundation, the cable is tensioned from the top plate of the wall to a specified load by tightening a hex nut down the upper threaded stud onto a steel base plate. This provides a continuous load path hold down resistance for the wall. Trusses are connected with QuickTie™ Connectors to provide distribution of load to the QuickTie™ System.

THE QuickTie ADVANTAGE:

- Less Expensive than Conventional Masonry
- 30% Stronger than Conventional Masonry
- Meets Building Code Requirements
- Pre-Stressing Helps Prevent Stair Step Cracks
- Quicker – Cuts Days Out of the Construction Cycle
- Installs in Hours (NOT DAYS)
- Eliminates Steel and Concrete Reinforcing
- Safer on Workers
  - No Workers Walking Lintels with Heavy Hoses
  - No Rebar Above the Slab with "OSHA SAFE" Caps
- Environmentally Friendly (Eliminates Concrete Washout for Lintels)
- All Components Can be Inspected after Framing
- Eliminates Lintel Inspection
- Eliminates Coordination and Installation of Truss Anchors
- Uninterrupted Load Path from the Uppermost Top Plate to the Foundation
- Wood Top Plates Allows for Easier Connection of Trusses on Top of Wall
- Lighter Structure–May Allow Reduced Footing Sizes

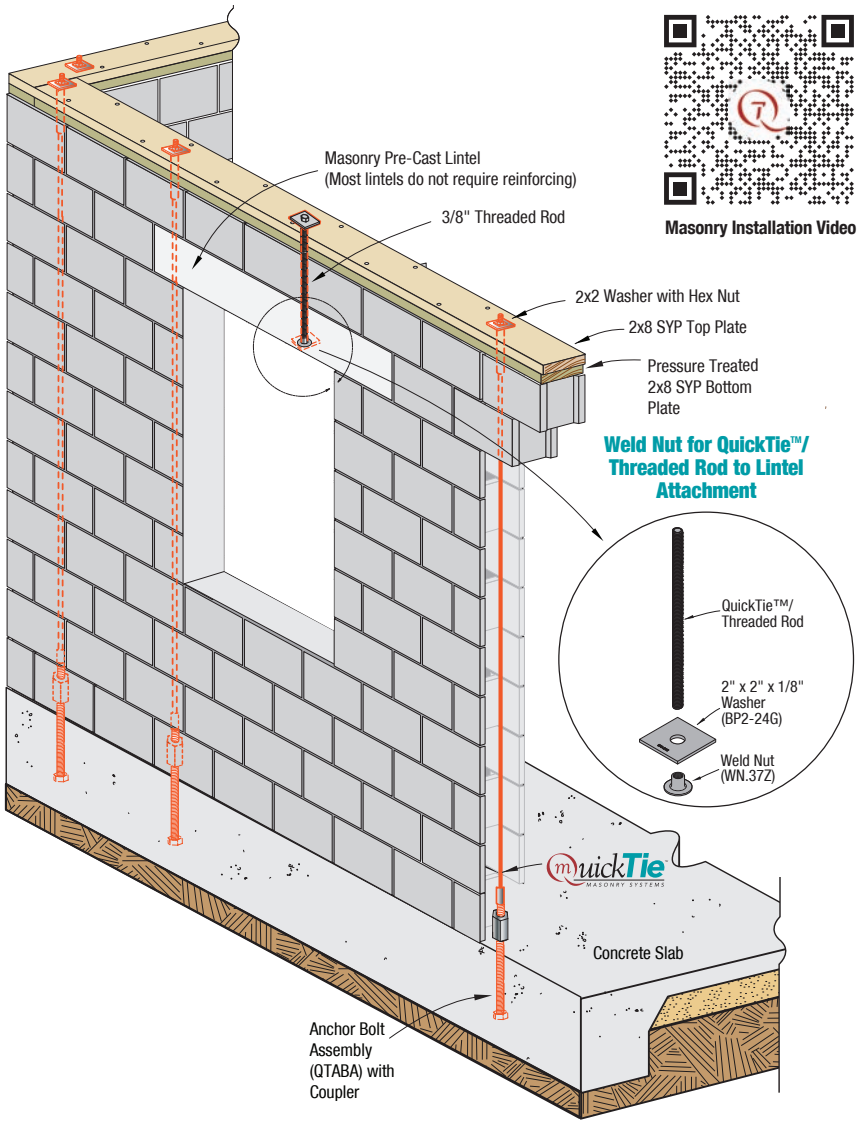

Masonry Installation Video

QuickTie™ Masonry - PVC Sleeve

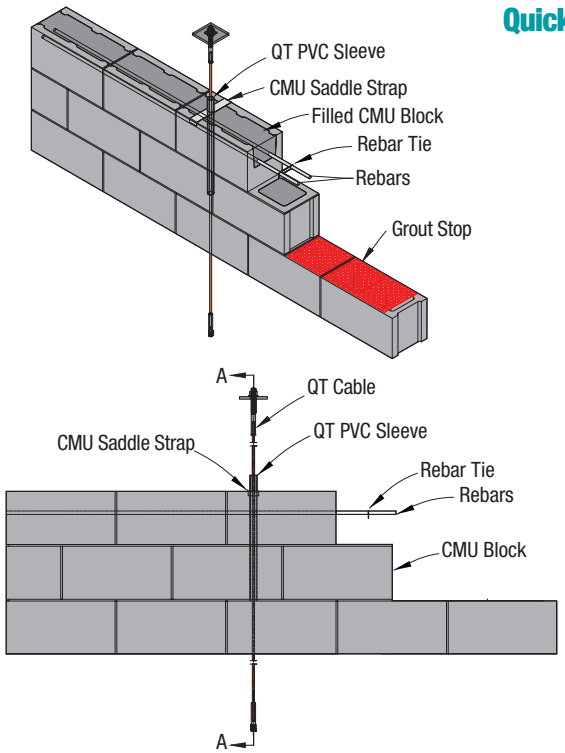

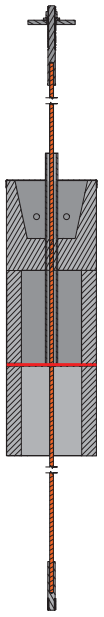

SECTION A-A

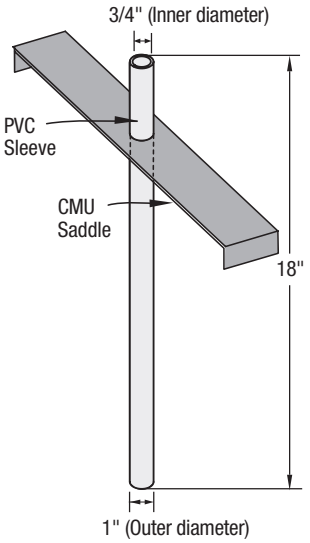

QTMS