QUICKTIE™ BEAM CONNECTOR (BPBC)

PRODUCT FEATURES:

QuickTie™ Beam Connectors (BPBC) are used to attach the QuickTie™ Cables directly to the beam under the bottom plate. The part includes washer and wood screws.

INSTALLATION:

- Use all specified fasteners to achieve the required cable load values.
- A minimum thread penetration of 3" into the beam is required.

Part No.	Description
BPBC2.25-33N (QTB)	2-1/4" x 2-1/4" x 3/16" Washer & 3/8" Hex Nut
BPBC2.25-33NS (QTB)	2-1/4" x 2-1/4" x 3/16" Washer, 3/8" Hex Nut & (4) SWH5 Wood Screws
BPBC2.25-44N (QTG)	2-1/4" x 2-1/4" x 1/4" Washer & 1/2" Hex Nut
BPBC2.25-44NS (QTG)	2-1/4" x 2-1/4" x 1/4" Washer, 1/2" Hex Nut & (6) SWH5 Wood Screws
BPBC2.25-45N (QTO)	2-1/4" x 2-1/4" x 1/4" Washer & 5/8" Hex Nut
BPBC2.25-45NS (QTO)	2-1/4" x 2-1/4" x 1/4" Washer, 5/8" Hex Nut & (6) SWH5 Wood Screws

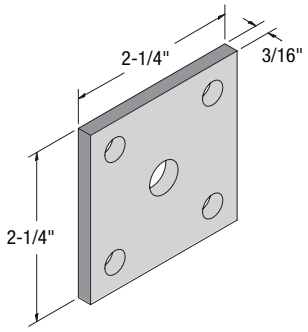

BPBC2.25-33N (QTB)
BPBC2.25-33NS (QTB)

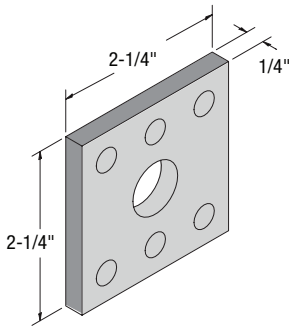

BPBC2.25-44N (QTG)
BPBC2.25-44NS (QTG)
BPBC2.25-45N (QTO)
BPBC2.25-45NS (QTO)

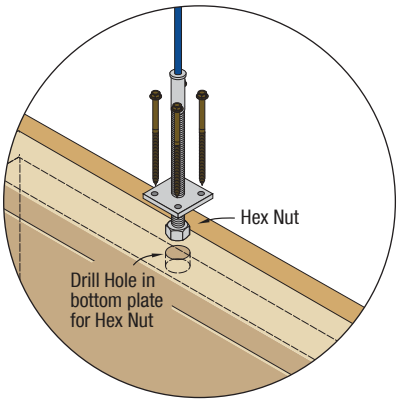

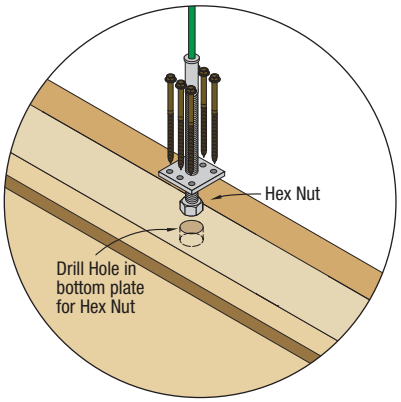

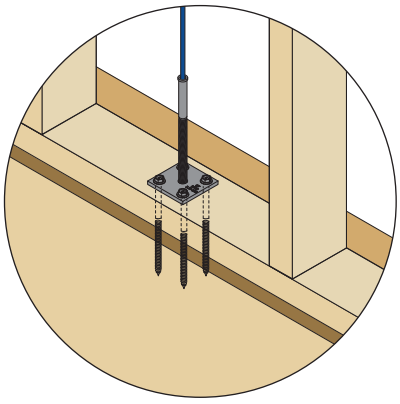

QTB

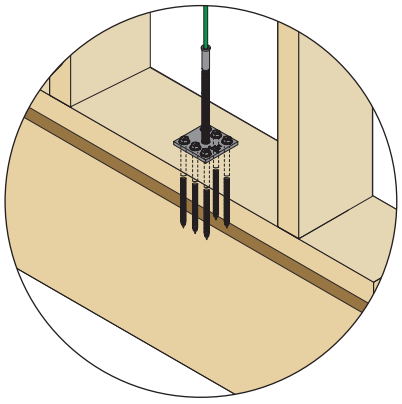

QTG & QTO

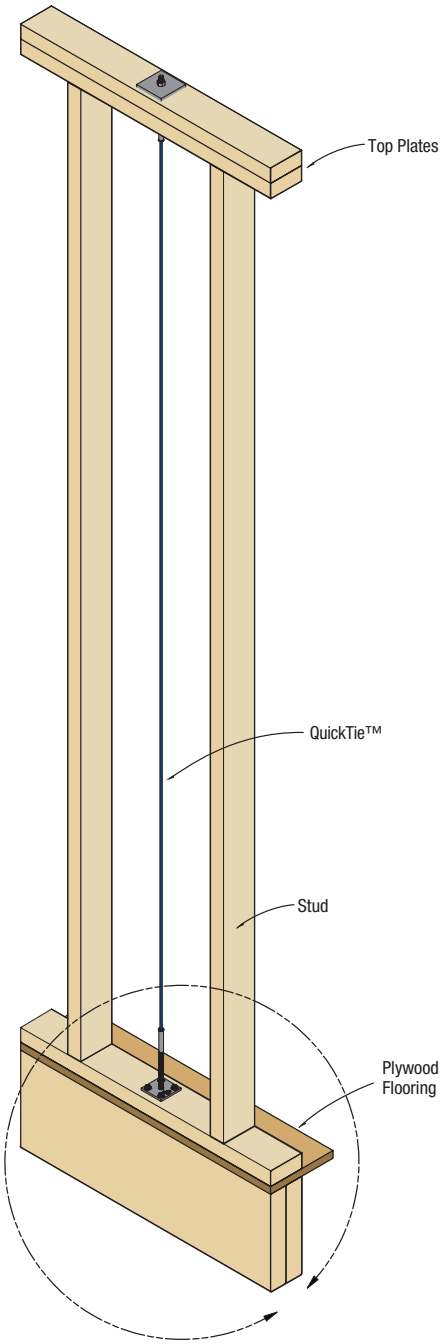

NOTE: A minimum thread penetration of 3" into the beam is required.