Typical Wood Installation

QuickTie™ to Threaded Rod Extension at Top Plate

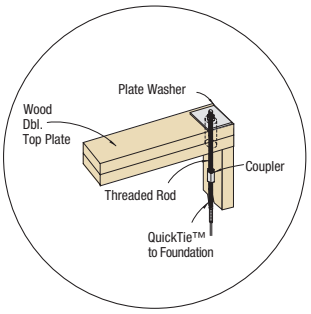

QuickTie™ to Masonry and Wood Wall

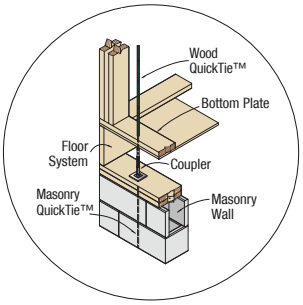

QuickTie™ to CMU Saddle Assembly on Top of CMU

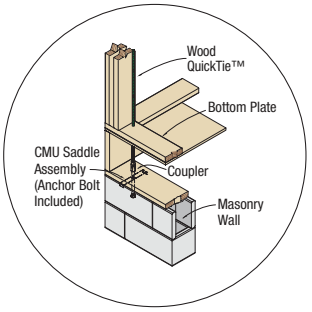

Anchor Chair

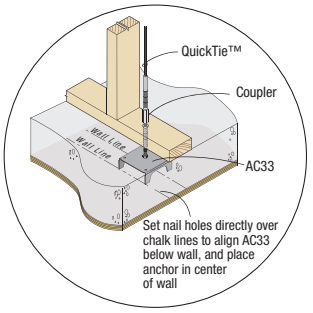

QE-1 ALLOWABLE TENSION VALUES FOR QUICKTIE™ SYSTEMS (QT)

Cable Type	Cable Diameter	Minimum Edge Distance, c_{a1}	Minimum End Distance, c_{a2}	Minimum Embedment Depth, h_{ef}	Allowable QT System Tension Loads[1,2,3]
	(in.)	(in.)	(in.)	(in.)	(lb)
QTB (Blue)	3/16	2-1/4	6	4	1,910
QTG (Green)	1/4	2-1/4	6	4	3,180
QTO (Orange)	5/16	3	6	6-5/8	4,455
QTR (Red)	3/8	3-1/2	6	8-1/8	6,545

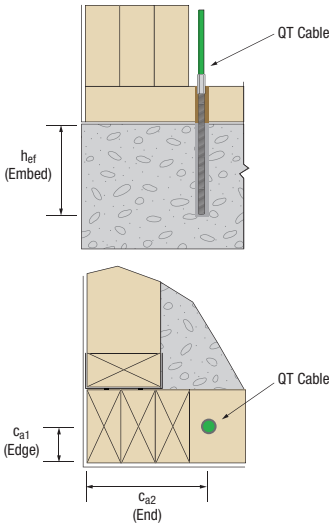

NOTES:

1. Allowable QT System tension loads are based on test results with cables installed in uncracked concrete and no supplementary reinforcement.
2. Minimum 28-day concrete compressive strength is 2,500 psi.

ALLOWABLE LOADS FOR QUICKTIE™ CABLES UNDER COMBINED TENSION AND SHEAR

Item No	Tension (lb)	Shear (lb)		
	T	F1	F2	F3
QTB	1,910	1,130	1,450	510
QTG	3,180	1,395	1,785	620

NOTES:

1. Allowable loads are based on the test results with SP #2 lumber.
2. T = Cable Tension
   F1 = Parallel to Sill Plate (in-plane shear)
   F2 = Perpendicular to Sill Plate (force acting from outside of wall)
   F3 = Perpendicular to Sill Plate (force acting from inside of wall)
3. Minimum concrete compression strength, F_C' = 2,500 psi
4. Minimum edge distance = 2-1/4", Min. end distance = 6-1/2" & Min. embedment = 4"
5. Frictional resistance due to self-weight of building components are not included.
6. Overspill epoxy per installation instructions.

