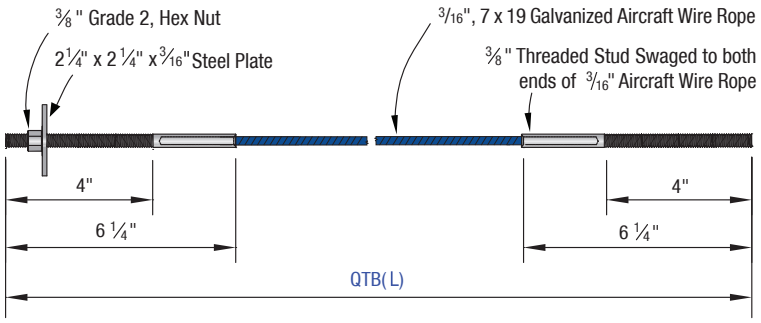

QTB Blue

ALLOWABLE LOAD: 1,910 LB

Wire Rope:
- Breaking Strength : 4,200 lb

Hole Diameter:
- Top Plate : 1"
- Sill Plate : 5/8"
- Concrete : 7/16"

Concrete:
- Min. Comp. Strength : 2,500 psi
- Min. Embedment : 4"
- Min. Edge Distance : 2-1/4"

TER 0910-01; FL #13468.1

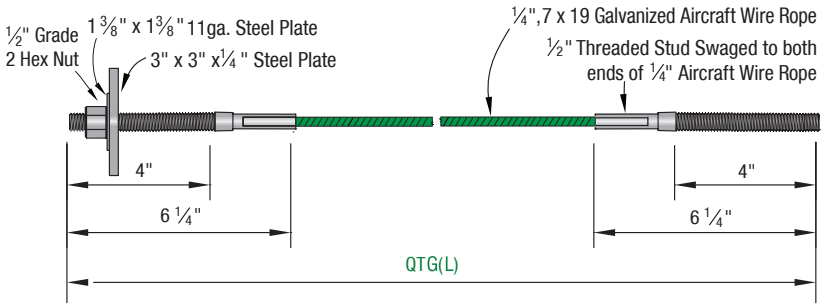

QTG Green

ALLOWABLE LOAD: 3,180 LB

Wire Rope:
- Breaking Strength : 7,000 lb

Hole Diameter:
- Top Plate : 1"
- Sill Plate : 5/8"

Concrete : 9/16"

Concrete:
- Min. Comp. Strength : 2,500 psi
- Min. Embedment : 4"
- Min. Edge Distance : 2-1/4"

TER 0910-01; FL #13468.2

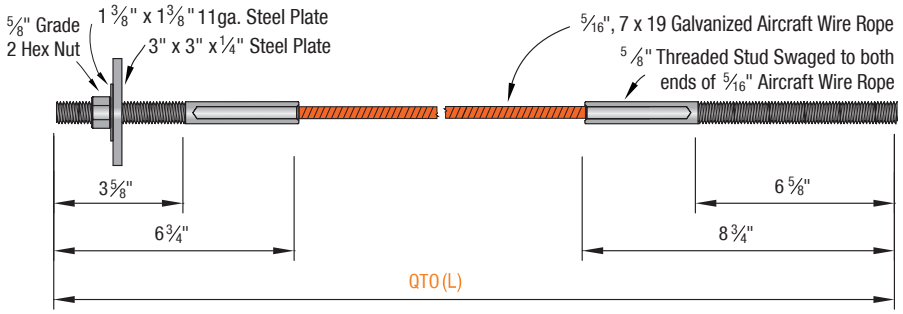

QTO Orange

ALLOWABLE LOAD: 4,455 LB

Wire Rope:
- Breaking Strength : 9,800 lb

Hole Diameter:
- Top Plate : 1"
- Sill Plate : 3/4"
- Concrete : 3/4"

Concrete:
- Min. Comp. Strength : 2,500 psi
- Min. Embedment : 6-5/8"
- Min. Edge Distance : 3"

TER 0910-01; FL #13468.3

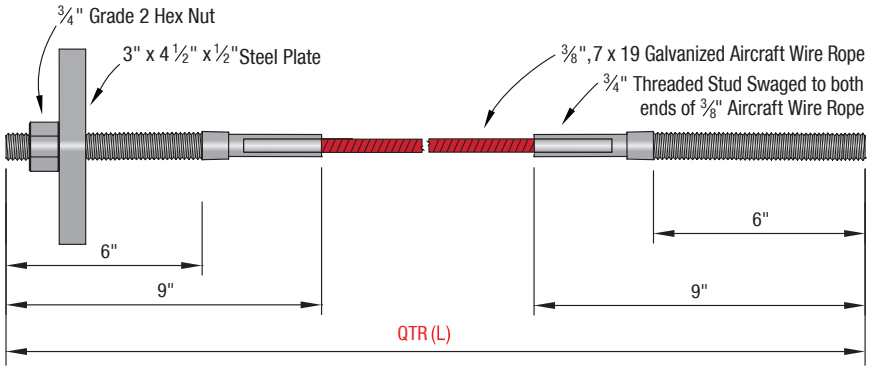

QTR Red

ALLOWABLE LOAD: 6,545 LB

Wire Rope:
- Breaking Strength : 14,400 lb

Hole Diameter:
- Top Plate : 1"
- Sill Plate : 7/8"
- Concrete : 7/8"

Concrete:
- Min. Comp. Strength : 2,500 psi
- Min. Embedment : 8-1/8"
- Min. Edge Distance : 3-1/2"

TER 0910-01; FL #13468.4

NOTES:

1. QuickTie™ cables are manufactured in one inch (1") increments from 2' to 62' (Longer lengths available).
2. QuickTie™ cables part numbers, QTX(L), correspond to the length (L) measured from the top of embed surface to the uppermost top plate. (Example: For L = 17'-1", QuickTie part numbers are QTB17.1 for 3/16"; QTG17.1 for 1/4"; QTO17.1 for 5/16" and, QTR17.1 for 3/8").
3. To anchor the QuickTie™ System to the foundation, QE-1 Epoxy Adhesive is used (Refer to Page 26 for product information).
4. Steel failure in testing was used to derive the allowable loads.

 ©Copyright 2026 Quick Tie Products, Inc.