PAS SERIES

PRODUCT FEATURES:

QuickTie™ Purlin Anchor Straps (PAS) are used for joist to concrete or CMU wall attachment and foundation applications.

MATERIAL:

PAS Series - 12 ga

COATING:

Galvanized (G185)

INSTALLATION:

- Use all specified fasteners in schedule to achieve the values indicated.
- PAS Series requires a minimum of 4" and 6" embedment into the concrete and CMU walls, respectively.
- Minimum concrete compressive strength is 2,500 psi.

CODE COMPLIANCE:

TER 0910-01; FL 3557

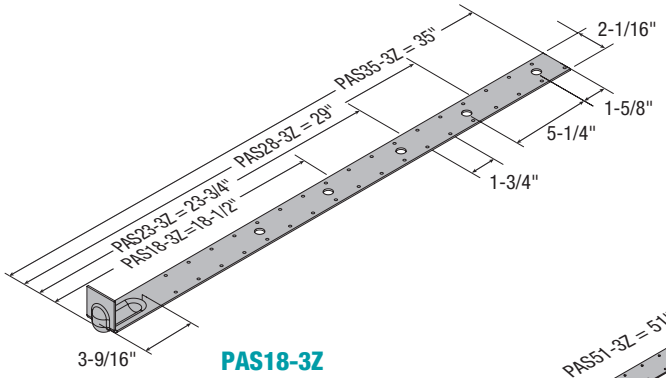

PAS18-3Z
PAS23-3Z
PAS28-3Z
PAS35-3Z

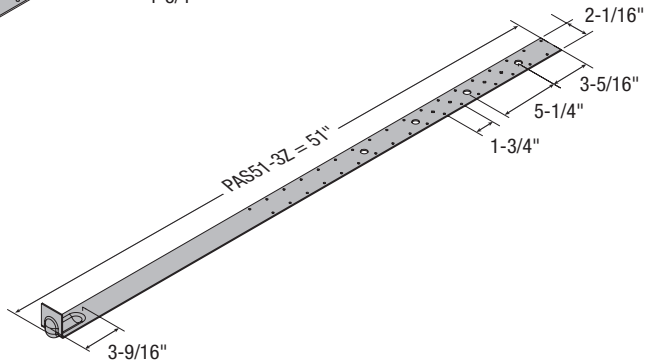

PAS51-3Z

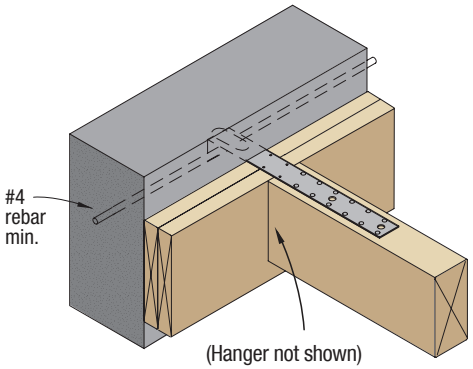

Purlin-to-Wall Attachment

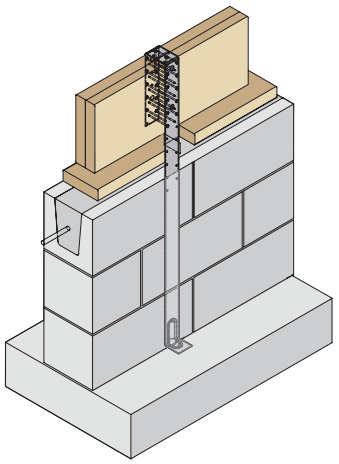

Rim Joist-to-CMU Stem Wall Attachment

ALLOWABLE TENSION LOADS FOR PURLIN ANCHORS (LB)[1]

Part No.	Length, L (in.)	Embed Length, L_e (in.)		Stud Fasteners		Allowable Loads (lb)[1,4]			
						SP / DF-L (SG = 0.50)		HF / SPF	
						Floor	Uplift	Floor	Roof
		Concrete[2]	CMU[3]	Type	Qty	1.0	1.6	1.0	1.6
PAS18-3Z	18-1/2	4	6	10d (0.148 x 3")	12	1,685	2,700	1,465	2,340
PAS23-3Z	23-3/4				16	2,250	3,600	1,950	3,120
PAS28-3Z	29				16	2,250	3,600	1,950	3,120
PAS35-3Z	35				16	2,250	3,600	1,950	3,120
PAS51-3Z	51				10	1,405	2,250	1,220	1,950

NOTES:

1. Minimum wood member size is 3" x 31/2".
2. Minimum compressive strength of concrete is 3,000 psi.
3. Minimum compressive strength of grout-filled CMU is 2,000 psi.
4. Total deflection of connector assembly at highest allowable load is 0.031".