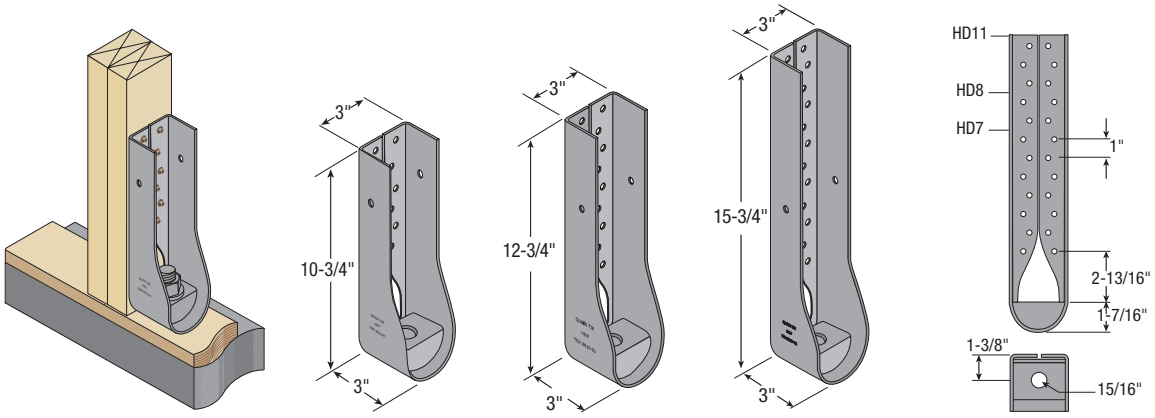

HD7 **HD8** **HD11**

(Part includes bend washer and structural wood screws)

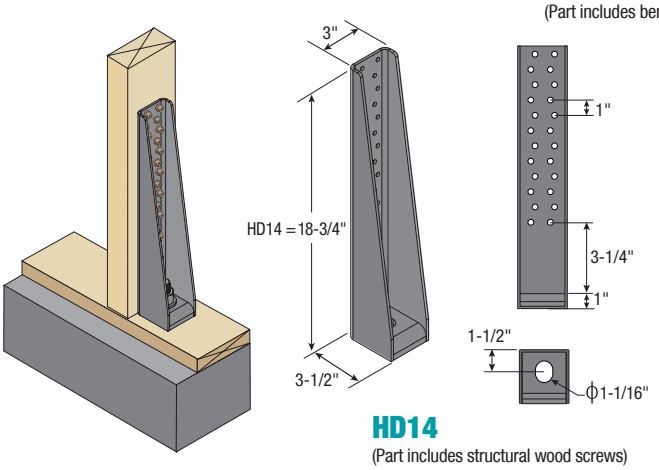

HD14

(Part includes structural wood screws)

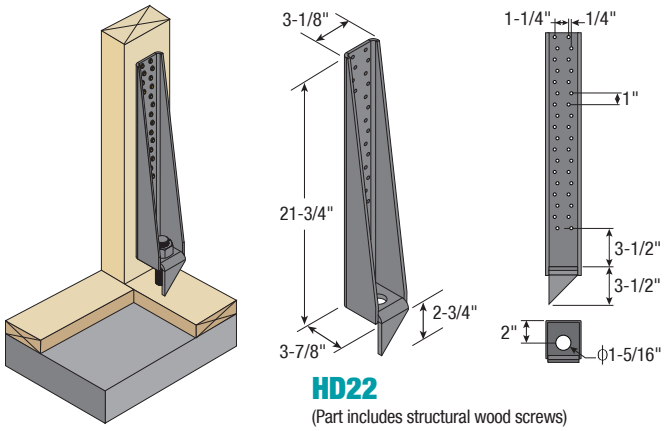

HD22

(Part includes structural wood screws)

ALLOWABLE LOADS FOR HOLDOWNS (LB)

Part No.[1,2]			Steel Thick.[3,4] (ga)		Dimensions (in.)						Fasteners [5,6]				Allowable Load Values					
											Nails / Screws / Bolts		Anchor Bolt		SP (SG = 0.55)		DF-L (SG = 0.50)		S-P-F (SG = 0.42)	
	Reference No.														C_D = 1.6		C_D = 1.6		C_D = 1.6	
QuickTie™	Simpson® Hardware (SH)	MiTek® Hardware (MH)	Strap	Washer	Height H	Width W	Depth D	Stud Face to Anchor CL	Top of Bottom Plate to Top of Washer	Min. Wood Member Size[2] (in.)	Qty	Type / Size	Qty	Size	Uplift (lb)	Δ (in.)	Uplift (lb)	Δ (in.)	Uplift (lb)	Δ (in.)
LTT20	LTT20B	LTS20B	12 ga	7 ga	20	2	2-1/2	1-3/8	9/32	(2) 2x4	10	10dx1-1/2	1	3/4"	1,680	0.194	1,575	0.186	1,375	0.172
HDTT	DTT2Z, DTT2Z-SDS2.5	DTB-TZ	14 ga	14 ga	6-7/8	3-1/4	1-3/4	1	1-1/8	2x4	8	SWH15	1	1/2"	2,300	0.190	2,055	0.149	1,525	0.088
HDTT3	HDU2-SDS2.5, HD3B	PHD2A, TDX2-TZ	12 ga	10 ga	6-7/8	3-1/4	1-3/4	1	1-3/16	(2) 2x4	8	SWH3	1	1/2"	3,475	0.074	3,210	0.067	2,770	0.055
HDTT6	HTT4, HTT5, HDUE3-SDS3	HTT45	10 ga	7 ga	16	3-1/4	1-7/8	1	1-1/4	(2) 2x4	26	16dx2-1/2	1	5/8"	5,480	0.145	5,480	0.145	4,895	0.129
HD5	HDU4-SDS2.5	PHD4A	14 ga	3 ga	8-3/4	3	3	1-3/8	1-1/2	(2) 2x4	10	SWH3	1	5/8"	5,885	0.197	5,445	0.181	3,365	0.106
HD7	HDU5-SDS2.5, HDUE5-SDS3	PHD5A	12 ga	3 ga	10-3/4	3	3	1-3/8	1-1/2	(2) 2x4	14	SWH3	1	7/8"	7,280	0.102	6,980	0.098	4,845	0.069
HD8	HDU8-SDS2.5, HDUE7-SDS3	PHD8	12 ga	3 ga	12-3/4	3	3	1-3/8	1-1/2	(2) 2x6	18	SWH3	1	7/8"	8,390	0.065	7,755	0.059	6,325	0.043
HD11	HDQ8-SDS3, HDU11-SDS2.5, HHDQ11-SDS2.5, HDUE9-SDS3	UPHD8, UPHD9	12 ga	3 ga	15-3/4	3	3	1-3/8	1-1/2	(2) 2x4	24	SWH3	1	7/8"	11,855	0.118	11,080	0.112	8,305	0.088
										4x6	24	SWH3	1	7/8"	12,755	0.139	12,755	0.139	8,310	0.085
HD14	HHDQ14-SDS2.5, HDUE13-SDS3	---	7 ga	3/8" Flat	18-3/4	3	3-1/2	1-1/2	1	4x6	30	SWH3	1	1"	14,120	0.095	14,060	0.095	11,170	0.075
HD22	HD19, HDU14-SDS2.5, HDUE17-SDS3	TD15, UPHD11, UPHD14	7 ga	3/8" Point	24-1/2	3-1/8	3-7/8	2	3-1/2	6x6	36	SWH3	1	1-1/4"	22,245	0.087	20,115	0.078	19,205	0.068

NOTES:

1. Anchor bolt installation into any substrates should be designed to resist the allowable uplift loads.
2. Holdowns shall be installed into the wide face of the wood member in order to achieve the tabulated allowable load values.
3. Refer to page 71 for structural wood screw SWH3 (1/4" x 3") and SWH15 (1/4" x 1-1/2") details.
4. Bend washer (3/8" flat) welded to bend strap around perimeter with 1" offset from the base.
5. Bend washer (3/8" point) welded to bend strap around perimeter with 3-1/2" offset from the base.
6. These Reference Numbers above are for the purpose of enabling our customers to identify the QuickTie™ alternative to specified product names, but the attributes of the products references (particularly load values) may differ from the QuickTie™ part. Please note that product comparison via Reference Numbers is for general application comparison only. Reference Numbers should not be used as an apples-to-apples substitution tool. Customers are solely responsible for comparing specific load values, fastener schedules, anchoring requirements, material specifications, and other factors when determining the suitability of use of any particular product. QuickTie™ makes no claim, stated or implied, of suitability for purpose or qualification for usage of our products that may be substituted for a specified product. Any specification, submittal, or change to a specified product should be approved in writing by the designer or Engineer of Record (EOR). MiTek® and Simpson Strong-Tie® are registered trademarks of their respective companies, with which QuickTie™ is unaffiliated, and neither of whom endorse or approve use of their product names in this catalog as "reference numbers".

 ©Copyright 2026 Quick Tie Products, Inc. |