## PBA SERIES

**PRODUCT FEATURES:**

Post Base Anchors (PBA) are used to attach the base of a wood post to a concrete foundation. The PBAs are comprised of a Post Base Strap and a Stand-Off (SO) plate. The SO plate is designed to provide a 1-inch clearance between the bottom of the wood post and top of foundation in order to meet IBC Section 2304.12 and IRC Section R317 requirements for protection of wood-based products against decay.

**MATERIAL:**

PBA Strap & SO - 12 ga

**COATING:**

Galvanized (G185)

**INSTALLATION:**

- Use all specified fasteners in schedule to achieve allowable load values.
- The designer or specifier shall check the requirements and capacity of wood post and concrete for resisting gravity and uplift loads.
- Nails (16d common) and anchor assembly (5/8" threaded rod, heavy hex nut, 2-3/4" x 2-3/4" x 3/8" washer and epoxy) are NOT included.
- Clean concrete surface, place Post Base Strap in position, mark the anchor bolt hole locations and drill holes using appropriate bit and drill.
- Replace Post Base Strap and install specified anchors with hex head or nut on top of the square washer.
- Place Stand Off Plate over hex nuts and position wood post on top.
- Attach Post Base Strap to wood post using 16d common nails on both sides.

**CODE COMPLIANCE:**

TER 0910-01; FL 3557

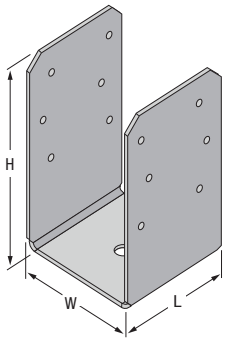


POST BASE STRAP

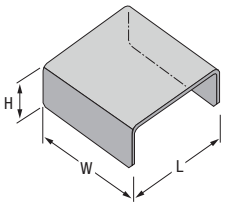


STAND-OFF (SO) PLATE

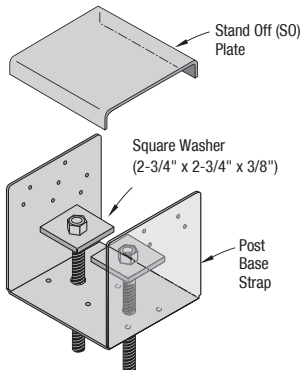


(PBA77/88 shown)

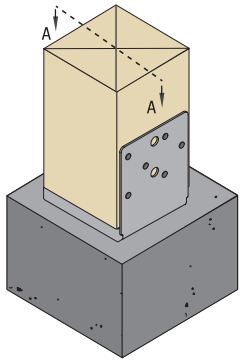


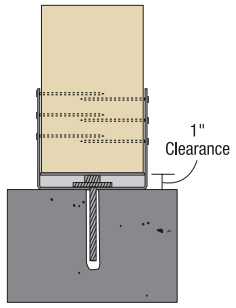


Section A-A

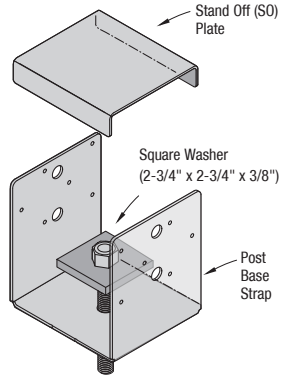


(PBA66 shown, PBA44/46 similar)

## ALLOWABLE LOADS FOR POST BASE ANCHORS (LB)[1]

| Part No. | | Strap Dimensions (in.) | | | Nominal Post Size | Fasteners | | | | Southern Pine (0.55) or Douglas Fir-Larch (0.50) | |
|---|---|---|---|---|---|---|---|---|---|---|---|
| | | Width | Length | Height | | Post | | Anchor | | Bearing | Uplift |
| | | W | L | H | | Qty | Size | Qty | Size | $C_D$ = 1.0 | $C_D$ = 1.6 |
| PBA44 | STRAP | 3-9/16 | 3-1/2 | 5-1/2 | 4x4 | 12 | 16d | 1 | 5/8 | 11,140 | 2,335 |
| | SO | 3-1/2 | 3-1/2 | 1 | | | | | | | |
| PBA44R* | STRAP | 4-1/16 | 3-1/2 | 5-1/4 | 4x4 (Rough) | 12 | 16d | 1 | 5/8 | 11,140 | 2,335 |
| | SO | 3-1/2 | 5 | 1 | | | | | | | |
| PBA46 | STRAP | 3-9/16 | 5 | 6 | 4x6 | 12 | 16d | 1 | 5/8 | 13,000 | 2,335 |
| | SO | 3-1/2 | 5 | 1 | | | | | | | |
| PBA46R* | STRAP | 4-1/16 | 5 | 5-3/4 | 4x4 (Rough) | 12 | 16d | 1 | 5/8 | 13,000 | 2,335 |
| | SO | 3-1/2 | 5 | 1 | | | | | | | |
| PBA66[2] | STRAP | 5-1/2 | 5 | 6 | 6x6 | 12 | 16d | 1 | 5/8 | 16,485 | 2,335 |
| | SO | 5-7/16 | 5 | 1 | | | | | | | |
| PBA66R[2*] | STRAP | 6 | 5 | 5-3/4 | 4x6 (Rough) | 12 | 16d | 1 | 5/8 | 16,485 | 2,335 |
| | SO | 5-7/16 | 5 | 1 | | | | | | | |
| PBA77 | STRAP | 7-1/8 | 7-1/16 | 7-1/4 | 7x7 | 14 | 16d | 2 | 5/8 | 16,485 | 3,590 |
| | SO | 7 | 7 | 1 | | | | | | | |
| PBA88 | STRAP | 7-1/2 | 7-1/16 | 7-1/16 | 8x8 | 14 | 16d | 2 | 5/8 | 27,065 | 3,590 |
| | SO | 7-3/8 | 7 | 1 | | | | | | | |
| PBA88R* | STRAP | 8-1/16 | 6-13/16 | 7 | 8x8 (Rough) | 14 | 16d | 2 | 5/8 | 27,065 | 3,590 |
| | SO | 7-15/16 | 6-13/16 | 1 | | | | | | | |
| PBA1010* | STRAP | 9 | 9-1/2 | 7-1/4 | 10x10 | 24 | 16d | 2 | 5/8 | 35,310 | 3,590 |
| | SO | 9-1/2 | 8-3/4 | 1 | | | | | | | |
| PBA1010R* | STRAP | 9 | 10 | 7 | 10x10 (Rough) | 24 | 16d | 2 | 5/8 | 35,310 | 3,590 |
| | SO | 10 | 8-3/4 | 1 | | | | | | | |
| PBA1212* | STRAP | 11 | 11-1/2 | 7-1/4 | 12x12 | 24 | 16d | 2 | 5/8 | 35,310 | 3,590 |
| | SO | 11-1/2 | 10-3/4 | 1 | | | | | | | |
| PBA1212R* | STRAP | 11 | 12-1/8 | 7-1/4 | 12x12 (Rough) | 24 | 16d | 2 | 5/8 | 35,310 | 3,590 |
| | SO | 12-1/16 | 10-3/4 | 1 | | | | | | | |

**NOTES:**

1. Allowable load values provided are for wet service condition, no further reduction required.
2. With 10-gauge strap, the allowable bearing and uplift loads are ($C_D$= 1.6) are 16,485 lb and 2,545 lb, respectively.
3. For higher bearing loads, pack grout solid under 1" standoff plate prior to installation. Base bearing loads on column or concrete, according to the building code.

*Call QT for code approval information.