ANCHOR BOLT ASSEMBLY (ABA)

PRODUCT FEATURES:

Anchor Bolt Assembly (ABA) holds the anchor in place before pouring the concrete for both concrete slab/foundation and CMU wall applications (coupling application for QT cables).

ASSEMBLY:

Hole Form Locator - 20 ga, Galvanized (G90)
Threaded Rod - ASTM A36 Steel, Zinc Plated
Hex Nut - Grade 2, Zinc Plated
Couplers - Grade 2, Zinc Plated

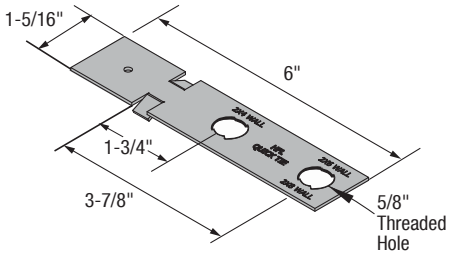

Hole Form Locator (HFL)

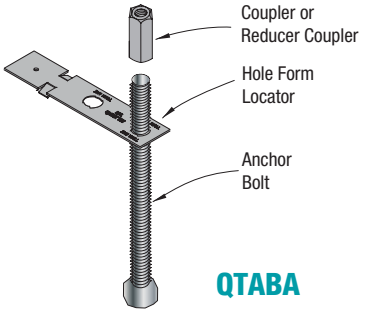

QTABA



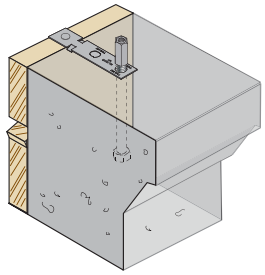

Part No.	Description
QTABA-Blue	Hole Form Locator, 5/8" Anchor Bolt & Reducer Coupler
QTABA-Green	Hole Form Locator, 5/8" Anchor Bolt & Reducer Coupler
QTABA-Orange	Hole Form Locator, 5/8" Anchor Bolt & Coupler
QTABA-Red	Hole Form Locator, 5/8" Anchor Bolt & Reducer Coupler

CMU SADDLE ASSEMBLY

PRODUCT FEATURES:

The CMU Saddle Assembly is designed to allow for easy installation and placement of Anchor Bolts when used with QuickTie™ Cables in concrete masonry wall applications. The CMU Saddle Assembly comes in eight different sizes to cover the four QuickTie™ sizes and 8" and 12" wide masonry walls. Each CMU Saddle Assembly includes saddle strap, anchor bolt and coupling.

ASSEMBLY:

Saddle Strap - 20 ga, Galvanized (G90)
Anchor Bolt - ASTM A36 Steel, Zinc Plated
Couplers - Grade 2, Zinc Plated

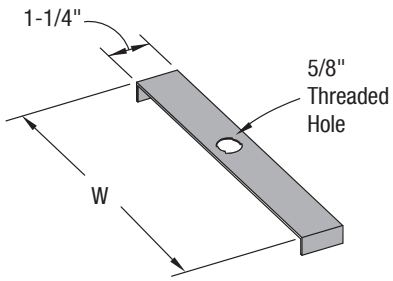

Saddle Strap

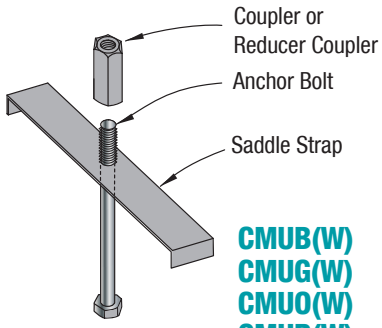

CMUB(W)
CMUG(W)
CMUO(W)
CMUR(W)

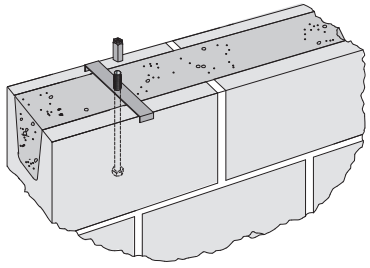

Part No.	Width (W)	Description
CMUB8	7-5/8"	8" CMU Wall, Saddle Strap, 5/8" Anchor Bolt & Reducer Coupler
CMUB12	11-5/8"	12" CMU Wall, Saddle Strap, 5/8" Anchor Bolt & Reducer Coupler
CMUG8	7-5/8"	8" CMU Wall, Saddle Strap, 5/8" Anchor Bolt & Reducer Coupler
CMUG12	11-5/8"	12" CMU Wall, Saddle Strap, 5/8" Anchor Bolt & Reducer Coupler
CMUO8	7-5/8"	8" CMU Wall, Saddle Strap, 5/8" Anchor Bolt & Coupler
CMUO12	11-5/8"	12" CMU Wall, Saddle Strap, 5/8" Anchor Bolt & Coupler
CMUR8	7-5/8"	8" CMU Wall, Saddle Strap, 5/8" Anchor Bolt & Reducer Coupler
CMUR12	11-5/8"	12" CMU Wall, Saddle Strap, 5/8" Anchor Bolt & Reducer Coupler

EPOXY ANCHORS

PRODUCT FEATURES:

Epoxy Anchors are used as foundation anchors to resist shear and wind uplifts.

ASSEMBLY:

Threaded Rod - ASTM A36 Steel, Zinc Plated
Hex Nut - Grade 2, Zinc Plated
Square Washer - ASTM A653 Grade 33 or A36 steel, Galvanized (G60 or better), Zinc Plated or GEOMET® (Superior to HDG).

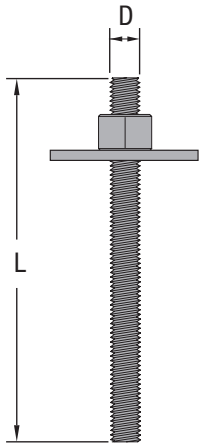

EA

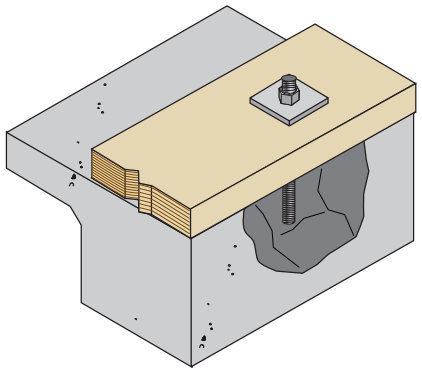

Part No.	Rod Size (D)	Length (L)*	Description
EA.5x6NS	1/2"	6"	1/2"x 6" Threaded Rod, Hex nut and 2 x 2 Galvanized (G185) washer
EA.5x6NS(3x3GEO)	1/2"	6"	1/2"x 6" Threaded Rod, Hex nut and 3 x 3 GEOMET® washer
EA.5x6NS(3x3Z)	1/2"	6"	1/2"x 6" Threaded Rod, Hex nut and 3 x 3 Zinc Plated (G60) washer
EA.5x8NS	1/2"	8"	1/2"x 8" Threaded Rod, Hex nut and 2 x 2 Galvanized (G185) washer
EA.625x6NS	5/8"	6"	5/8"x 6" Threaded Rod, Hex nut and 2 x 2 Galvanized (G185) washer
EA.625x8NS	5/8"	8"	5/8"x 8" Threaded Rod, Hex nut and 2 x 2 Galvanized (G185) washer

*Other sizes and lengths available upon request