ANCHOR CHAIR (AC33)

PRODUCT FEATURES:

Anchor Chair (AC33) is utilized for the precise and easy placement of wet set/cast-in-place anchor rods in elevated slabs.

MATERIAL:

AC33 - 16 ga

COATING:

None

INSTALLATION:

- Align nail holes over chalk line and nail to form.
- Install desired size anchor rod to AC33.

Part No.	Description
AC33.37	Anchor Chair with 3/8" Welded Hex Nut
AC33.5	Anchor Chair with 1/2" Welded Hex Nut
AC33.62	Anchor Chair with 5/8" Welded Hex Nut
AC33.75	Anchor Chair with 3/4" Welded Hex Nut
AC33.87	Anchor Chair with 7/8" Welded Hex Nut
AC33.1.0	Anchor Chair with 1" Welded Hex Nut
AC33.1.12	Anchor Chair with 1-1/8" Welded Hex Nut
AC33.1.25	Anchor Chair with 1-1/4" Welded Hex Nut

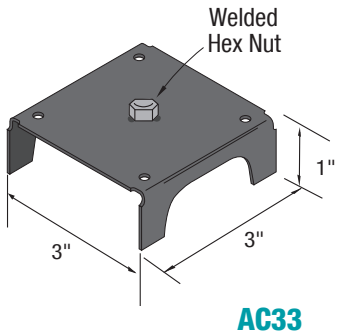

AC33

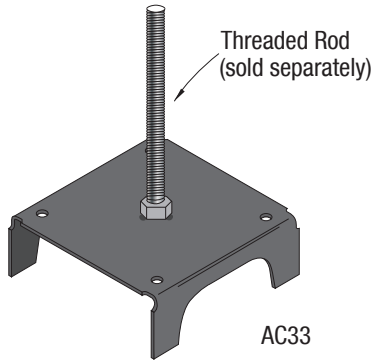

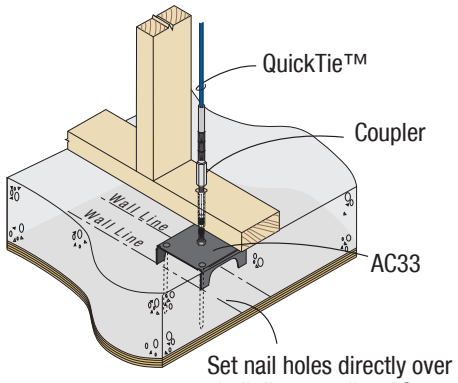

Set nail holes directly over chalk lines to align AC33 below wall, and place anchor in center of wall

ANCHOR BOLT

PRODUCT FEATURES:

Anchor bolts [ABG(L), ABO(L) & ABR(L)] are cast-in-place foundation anchors used to resist high wind uplift when assembled using QuickTie™ Couplers and QuickTie™ Cables (QTG, QTO & QTR).

Anchor bolts in bent forms [ABG(L)B, ABO(L)B & ABR(L)B] are available for the applications where edge distance cannot be met.

ASSEMBLY:

Threaded Rod - ASTM A36 Steel, Zinc Plated
Hex Nut - Grade 2, Zinc Plated
Square Washer - ASTM A653 Grade 33 Steel, Galvanized (G90);
ASTM A36 Steel, None or Zinc Plated
Coupler - Grade 2, Zinc Plated

INSTALLATION:

- Concrete should be a minimum of 2,500 psi.
- Install anchor bolt at required edge distance and embedment depth.

Part No.	Length (L)*	Description
ABG21Z	21"	1/2" Rod, 3" x 3" Washer, Hex Nuts & Coupler
ABG21BZ	21"	1/2" Rod (Bent), 3" x 3" Washer, Hex Nuts & Coupler
ABO21Z	21"	5/8" Rod, 3" x 3" Washer, Hex Nuts & Coupler
ABO21BZ	21"	5/8" Rod (Bent), 3" x 3" Washer, Hex Nuts & Coupler
ABO21BZ-NC	21"	5/8" Rod (Bent), HFL, 3" x 3" Washer, Hex Nuts & Coupler
ABR21Z	21"	3/4" Rod, 3" x 3" Washer, Hex Nuts & Coupler
ABR21BZ	21"	3/4" Rod (Bent), 3" x 3" Washer, Hex Nuts & Coupler
ABR24Z	24"	3/4" Rod, 3" x 3" Washer, Hex Nuts & Coupler
ABR24BZ	24"	3/4" Rod (Bent), 3" x 3" Washer, Hex Nuts & Coupler



ABG(L)
ABO(L)
ABR(L)

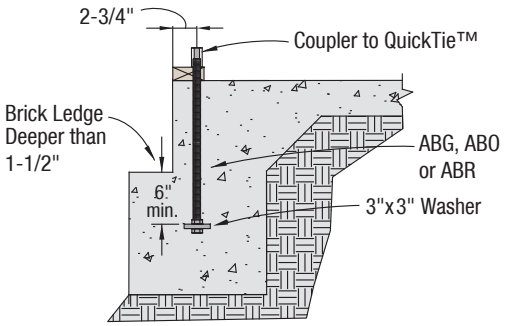

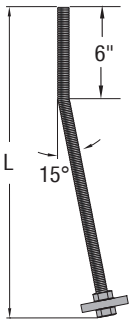

ABG(L)B
ABO(L)B
ABR(L)B

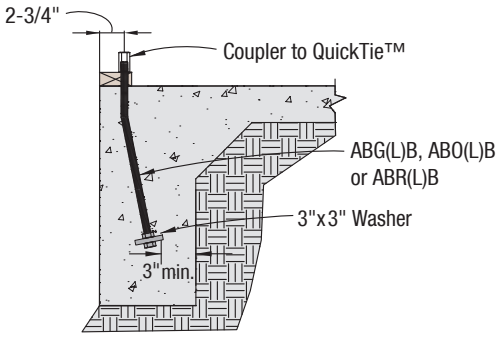

Use this detail when the min. edge distance cannot be accomplished